KOIZUMI
＿違う発想がある

KOIZUMI SANGYO (HK) CORPORATION LTD.
Units A-B, 26th Floor, 8 Hart Avenue, Tsimshatsui, Kowloon, Hong Kong
Tel: +852-2714 3773 Fax: +852-2714 0006

Item no. DD091-1430B8530

Series Name: Φ80 Series Lens Type

Installation	Recessed mount
Type	Φ80 Series Lens Type
Fixture wattage	14.2W
Beam angle	30 deg
Color Temp.	3000K
CRI	Ra>85
Luminous	1268 lm
Body	Die-cast aluminum alloy
Body finish	N/A
Trim finish	Black
Reflector finish	N/A
IP Rate	IP20
Light source	COB module
Input Voltage	AC220~240V
Dimming Type	Non-Dimmable
Certificate	CE, CCC
Cut Hole	80mm

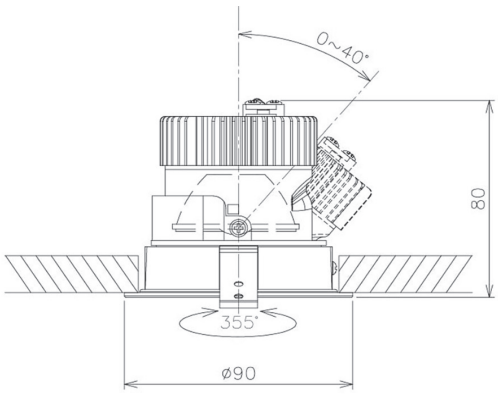
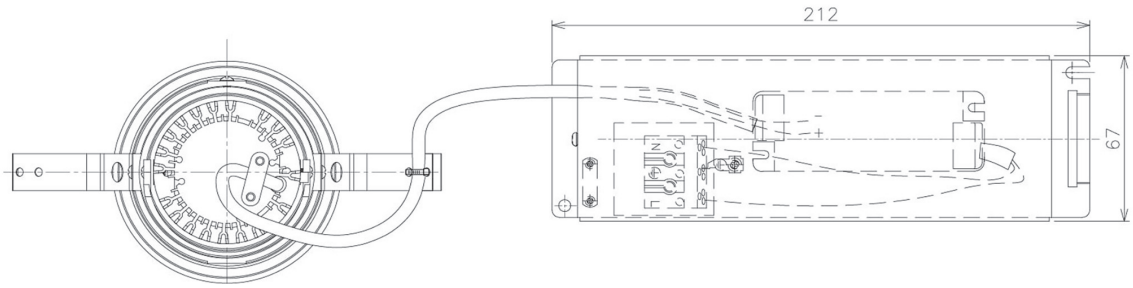
Height (Weight)	
36.0W	138 (0.7kg)
28.5W	138 (0.7kg)
21.0W	98 (0.6kg)
14.2W	98 (0.6kg)
7.4W	78 (0.6kg)
5.0W	78 (0.4kg)