KOIZUMI
＿違う発想がある

KOIZUMI SANGYO (HK) CORPORATION LTD.
Units A-B, 26th Floor, 8 Hart Avenue, Tsimshatsui, Kowloon, Hong Kong
Tel: +852-2714 3773 Fax: +852-2714 0006

Item no. DD103-4015MW9030

Series Name: Versa R-G, Antiglare
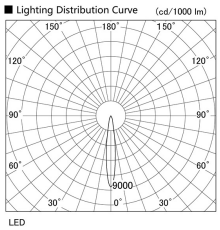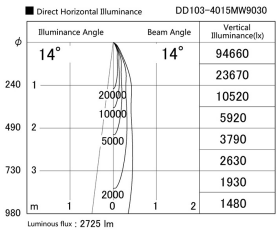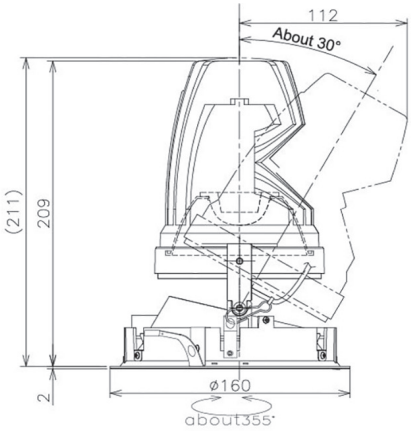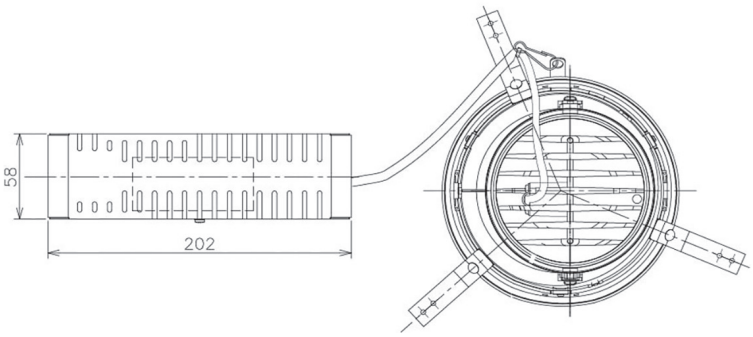
Installation	Recessed mount
Type	
Fixture wattage	40W
Beam angle	14 deg.
Color Temp.	3000K
CRI	Ra>90
Luminous	2726 lm
Body	Die-cast aluminum alloy
Body finish	N/A
Trim finish	White
Reflector finish	Mirror
IP Rate	IP20
Light source	COB module
Input Voltage	AC220~240V
Dimming Type	Non-Dimmable
Certificate	CE, CCC
Cut Hole	150mm