KOIZUMI
＿違う発想がある

KOIZUMI SANGYO (HK) CORPORATION LTD.
Units A-B, 26th Floor, 8 Hart Avenue, Tsimshatsui, Kowloon, Hong Kong
Tel: +852-2714 3773 Fax: +852-2714 0006

Item no. DD098-5040DW9040

Series Name: Φ150 Spark

Dark Mirror Reflector

Installation	Recessed mount
Type	
Fixture wattage	48.5W
Beam angle	59 deg
Color Temp.	4000K
CRI	Ra>90
Luminous	4174 lm
Body	Die-cast aluminum alloy
Body finish	N/A
Trim finish	White
Reflector finish	Dark Mirror
IP Rate	IP20
Light source	COB module
Input Voltage	AC220~240V
Dimming Type	Non-Dimmable
Certificate	CE, CCC
Cut Hole	150mm

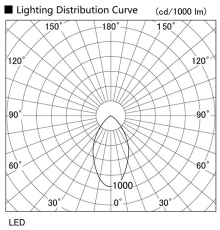

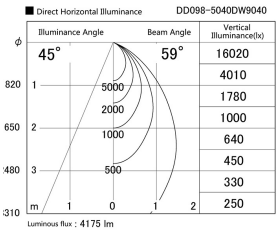
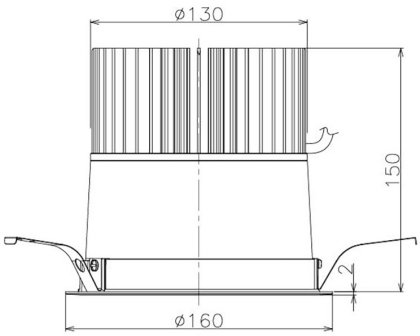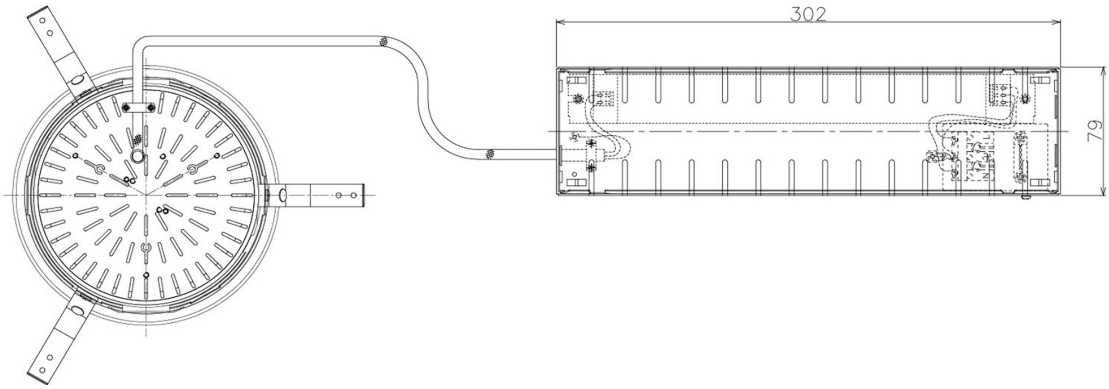
Height (Weight)	
65.3W	152 (1.5kg)
48.5W	152 (1.5kg)
44.3W	132 (1.3kg)
33.8W	132 (1.3kg)
30.3W	132 (1.3kg)
23.0W	102 (1.0kg)