KOIZUMI
＿違う発想がある

KOIZUMI SANGYO (HK) CORPORATION LTD.
Units A-B, 26th Floor, 8 Hart Avenue, Tsimshatsui, Kowloon, Hong Kong
Tel: +852-2714 3773 Fax: +852-2714 0006

Item no. DD098-6560MB8527L

Series Name: Φ150 Spark (Swallow Cone)

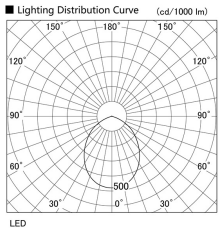

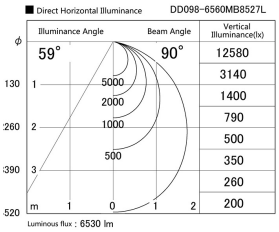

Installation	Recessed mount
Type	
Fixture wattage	65.3W
Beam angle	59 deg
Color Temp.	2700K
CRI	Ra>85
Luminous	6529 lm
Body	Die-cast aluminum alloy
Body finish	N/A
Trim finish	Black
Reflector finish	Mirror
IP Rate	IP20
Light source	COB module
Input Voltage	AC220~240V
Dimming Type	Non-Dimmable
Certificate	CE, CCC
Cut Hole	150mm
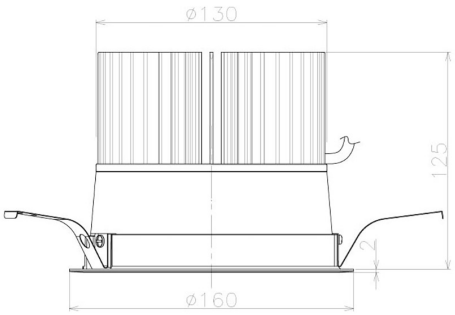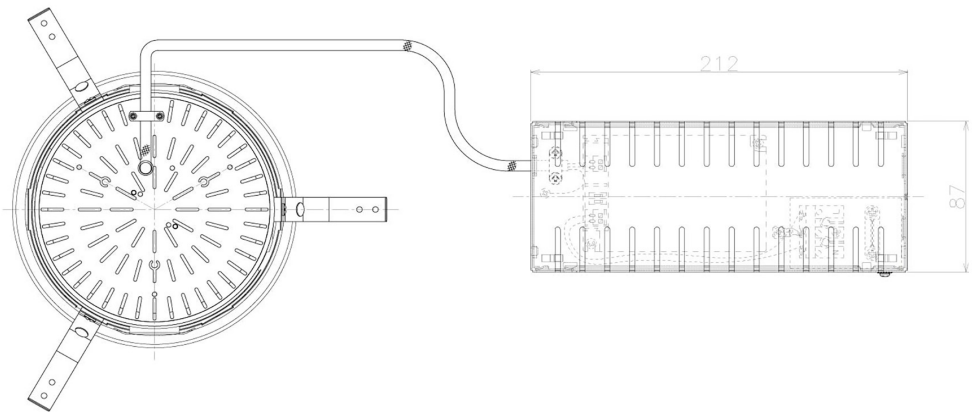
Height (Weight)	
65.3W	127 (1.4kg)
48.5W	127 (1.4kg)
44.3W	108 (1.2kg)
33.8W	108 (1.2kg)
30.3W	108 (1.2kg)
23.0W	78 (0.9kg)