KOIZUMI
＿違う発想がある

KOIZUMI SANGYO (HK) CORPORATION LTD.
Units A-B, 26th Floor, 8 Hart Avenue, Tsimshatsui, Kowloon, Hong Kong
Tel: +852-2714 3773 Fax: +852-2714 0006

Item no. DD091-1425MB9035

Series Name: Φ80 Series Lens Type, Antiglare

Installation	Recessed mount
Type	
Fixture wattage	14.2W
Beam angle	20 deg
Color Temp.	3500K
CRI	Ra>90
Luminous	810 lm
Body	Die-cast aluminum alloy
Body finish	N/A
Trim finish	Black
Reflector finish	Mirror
IP Rate	IP20
Light source	COB module
Input Voltage	AC220~240V
Dimming Type	Non-Dimmable
Certificate	CE, CCC
Cut Hole	80mm

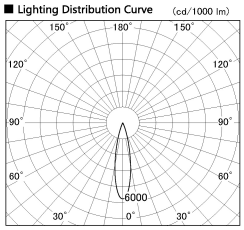

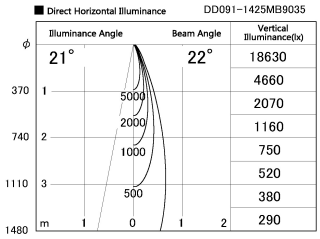
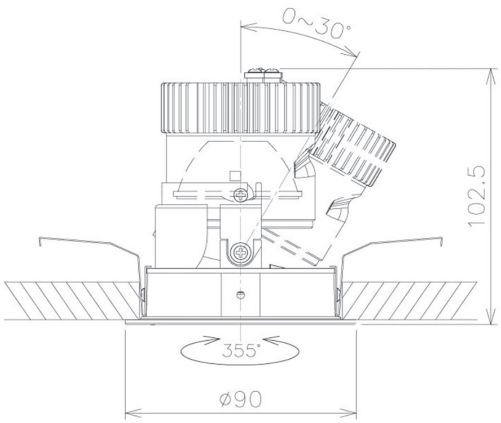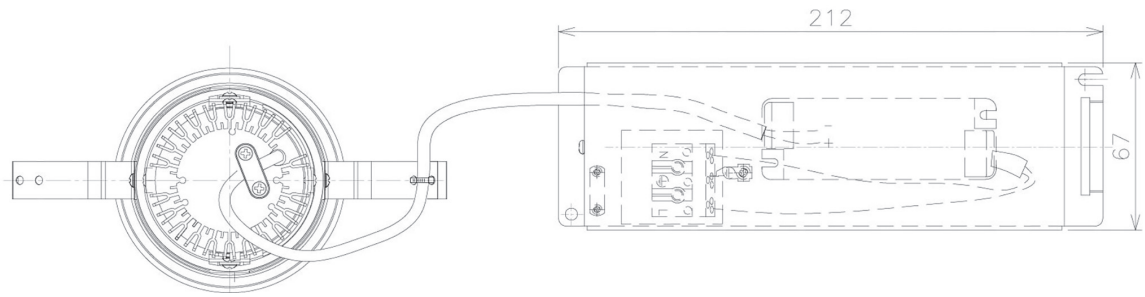
Height (Weight)	
36.0W	162 (0.7kg)
28.5W	162 (0.7kg)
21.0W	122 (0.6kg)
14.2W	122 (0.6kg)
7.4W	102 (0.6kg)
5.0W	102 (0.4kg)