KOIZUMI
＿違う発想がある

KOIZUMI SANGYO (HK) CORPORATION LTD.
Units A-B, 26th Floor, 8 Hart Avenue, Tsimshatsui, Kowloon, Hong Kong
Tel: +852-2714 3773 Fax: +852-2714 0006

Item no. DD051-3635WW8030-DP

Series Name:

Installation	Recessed mount
Type	
Fixture wattage	36W
Beam angle	55 x 30 deg.
Color Temp.	3000K
CRI	Ra>80
Luminous	2763 lm
Body	Die-cast aluminum alloy
Body finish	N/A
Trim finish	White
Reflector finish	N/A
IP Rate	IP20
Light source	COB module
Input Voltage	AC220~240V
Dimming Type	Non-Dimmable
Certificate	CE, CCC
Cut Hole	150mm

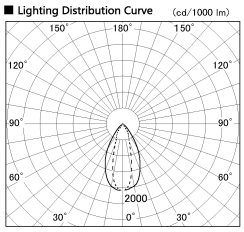

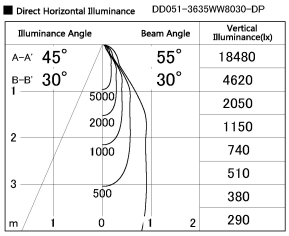

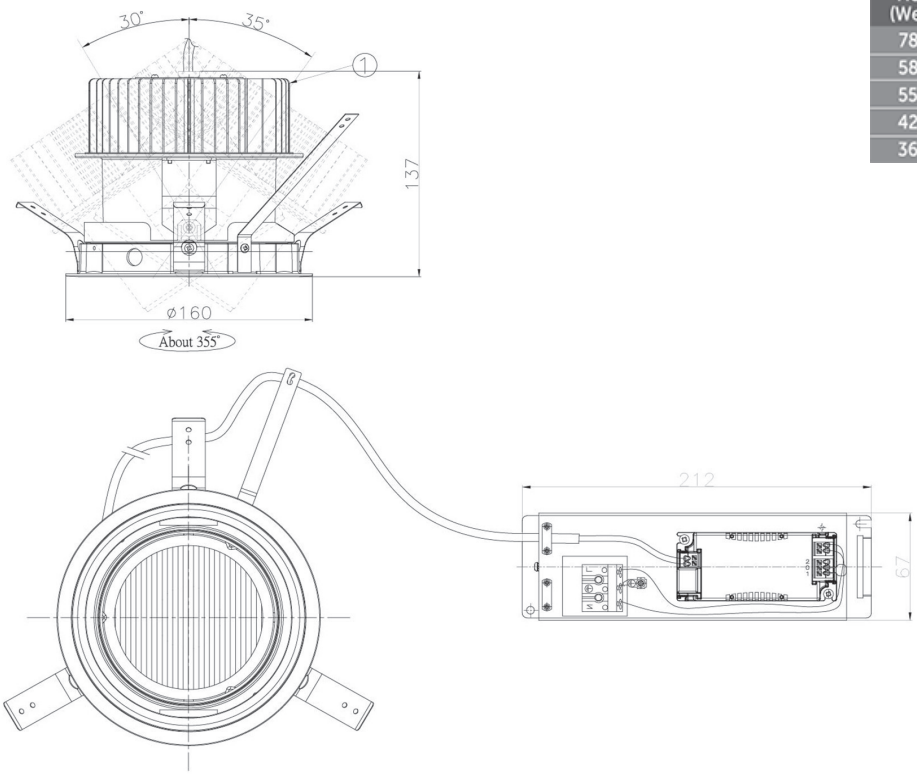

Height (Weight)	Wide flood
78.7W	157 (1.8kg)
58.5W	157 (1.8kg)
55.0W	157 (1.8kg)
42.8W	137 (1.5kg)
36.0W	137 (1.5kg)