KOIZUMI
＿違う発想がある

KOIZUMI SANGYO (HK) CORPORATION LTD.
Units A-B, 26th Floor, 8 Hart Avenue, Tsimshatsui, Kowloon, Hong Kong
Tel: +852-2714 3773 Fax: +852-2714 0006

Item no. SD357-2420W8527

Series Name: Cylinder Box (UL Track) (SD357)

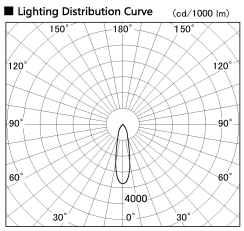

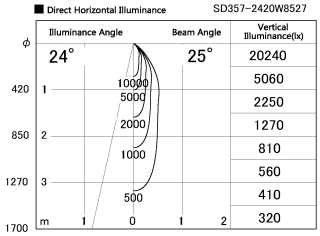
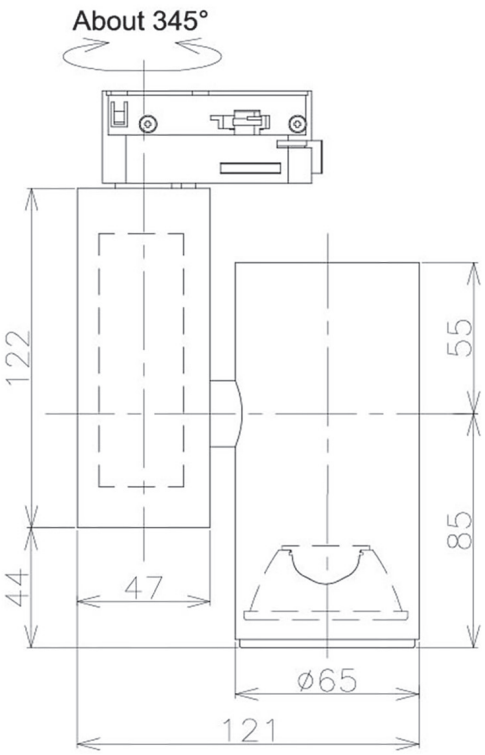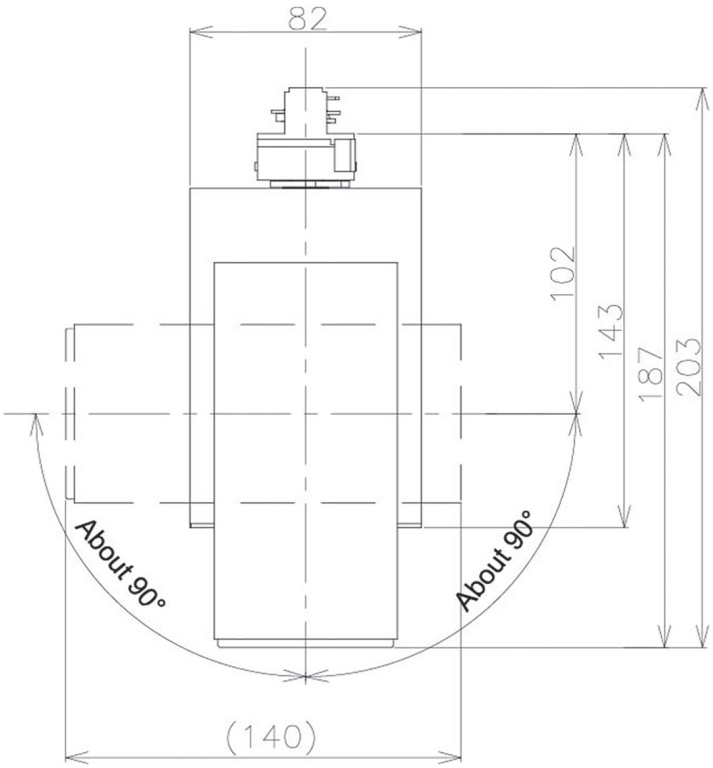
Installation	Track mount
Type	Cylinder Box (UL Track) (SD357)
Fixture wattage	24.3W
Beam angle	25 deg
Color Temp.	2700K
CRI	Ra>85
Luminous	1681 lm
Body	Die-cast aluminum alloy
Body finish	White
Trim finish	N/A
Reflector finish	N/A
IP Rate	IP20
Light source	COB module
Input Voltage	AC220~240V
Dimming Type	Non-Dimmable
Certificate	CE, CCC
Cut Hole	N/A