KOIZUMI
違う発想がある

KOIZUMI SANGYO (HK) CORPORATION LTD.
Units A-B, 26th Floor, 8 Hart Avenue, Tsimshatsui, Kowloon, Hong Kong
Tel: +852-2714 3773 Fax: +852-2714 0006

Item no. DD052-1330WW9040TL

Series Name: Φ80 Series Reflector Type, Fix Trimless
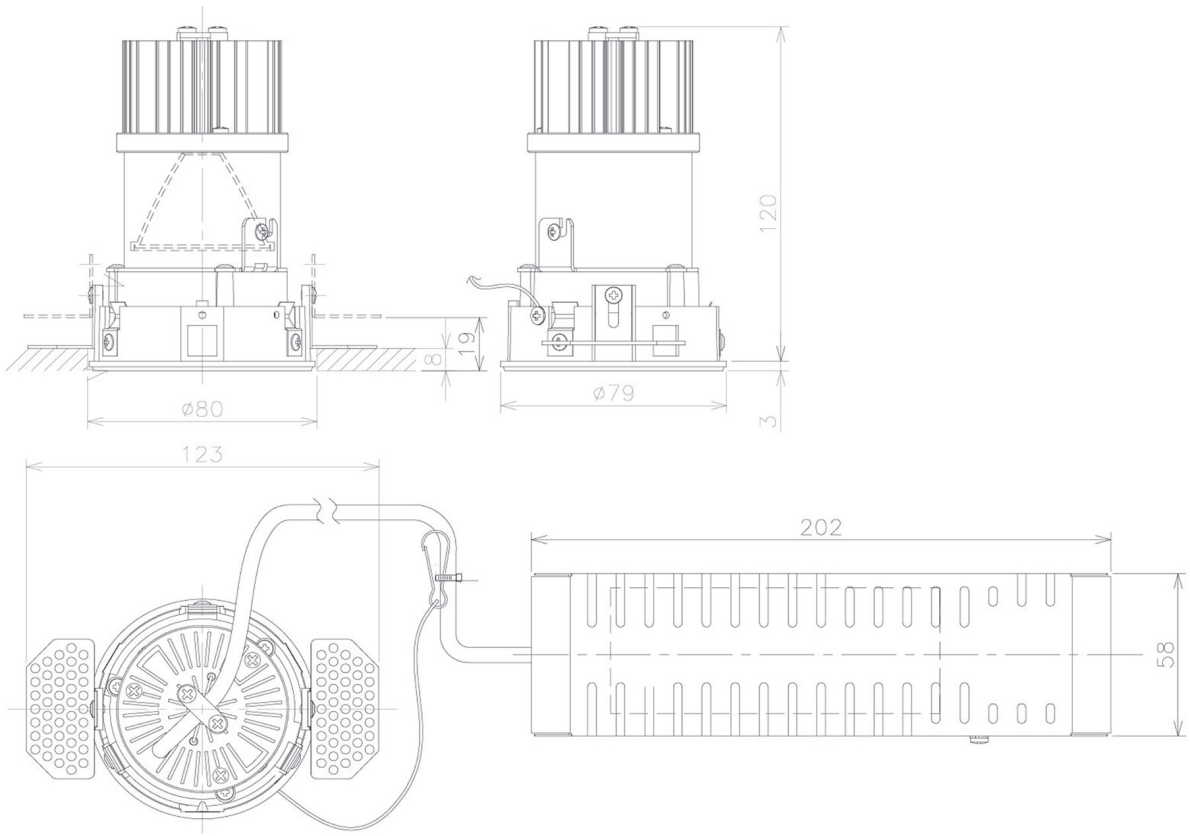
Installation	Recessed mount
Type	Φ80 Series Reflector Type, Fix Trimless
Fixture wattage	14.7W
Beam angle	30 deg
Color Temp.	4000K
CRI	Ra>90
Luminous	731 lm
Body	Dia-cast aluminum
Body finish	N/A
Trim finish	White
Reflector finish	White
IP Rate	IP20
Light source	COB module
Input Voltage	AC220~240V
Dimming Type	Non-Dimmable
Certificate	CE, CCC
Cut Hole	Φ80mm