KOIZUMI
違う発想がある

KOIZUMI SANGYO (HK) CORPORATION LTD.
Units A-B, 26th Floor, 8 Hart Avenue, Tsimshatsui, Kowloon, Hong Kong
Tel: +852-2714 3773 Fax: +852-2714 0006

Item no. DD099-2130WB9027

Series Name: Φ125 Spark
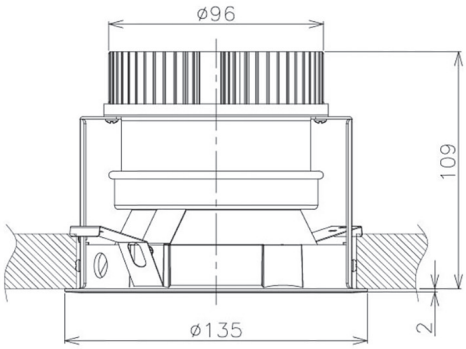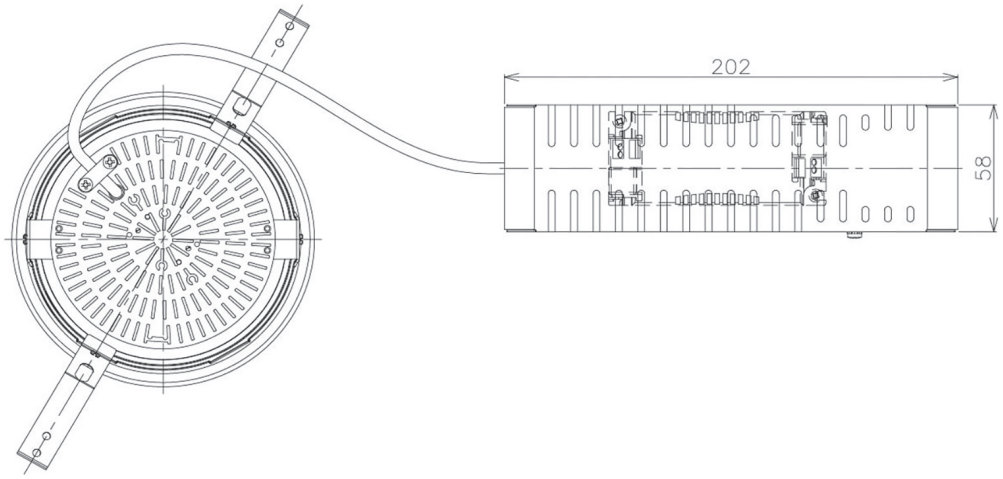
Installation	Recessed mount
Type	Φ125 Spark
Fixture wattage	19.9W
Beam angle	33 deg
Color Temp.	2700K
CRI	Ra>90
Luminous	1456 lm
Body	Die-cast aluminum alloy
Body finish	N/A
Trim finish	Black
Reflector finish	White
IP Rate	IP20
Light source	COB module
Input Voltage	AC220~240V
Dimming Type	Non-Dimmable
Certificate	CE, CCC
Cut Hole	125mm