KOIZUMI
＿違う発想がある

KOIZUMI SANGYO (HK) CORPORATION LTD.
Units A-B, 26th Floor, 8 Hart Avenue, Tsimshatsui, Kowloon, Hong Kong
Tel: +852-2714 3773 Fax: +852-2714 0006

Item no. DD068-6550MW9030D-AS Series Name: Asymmetric

Installation	Recessed mount
Type	
Fixture wattage	58.5W
Beam angle	80 x 65 deg.
Color Temp.	3000K
CRI	Ra>90
Luminous	4211 lm
Body	Die-cast aluminum alloy
Body finish	N/A
Trim finish	White
Reflector finish	Mirror
IP Rate	IP20
Light source	COB module
Input Voltage	AC220~240V
Dimming Type	Non-Dimmable
Certificate	CE, CCC
Cut Hole	150mm

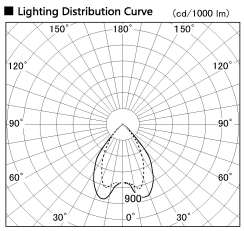

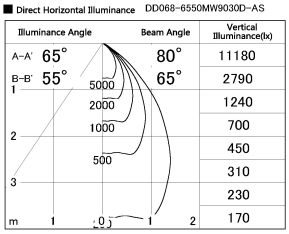

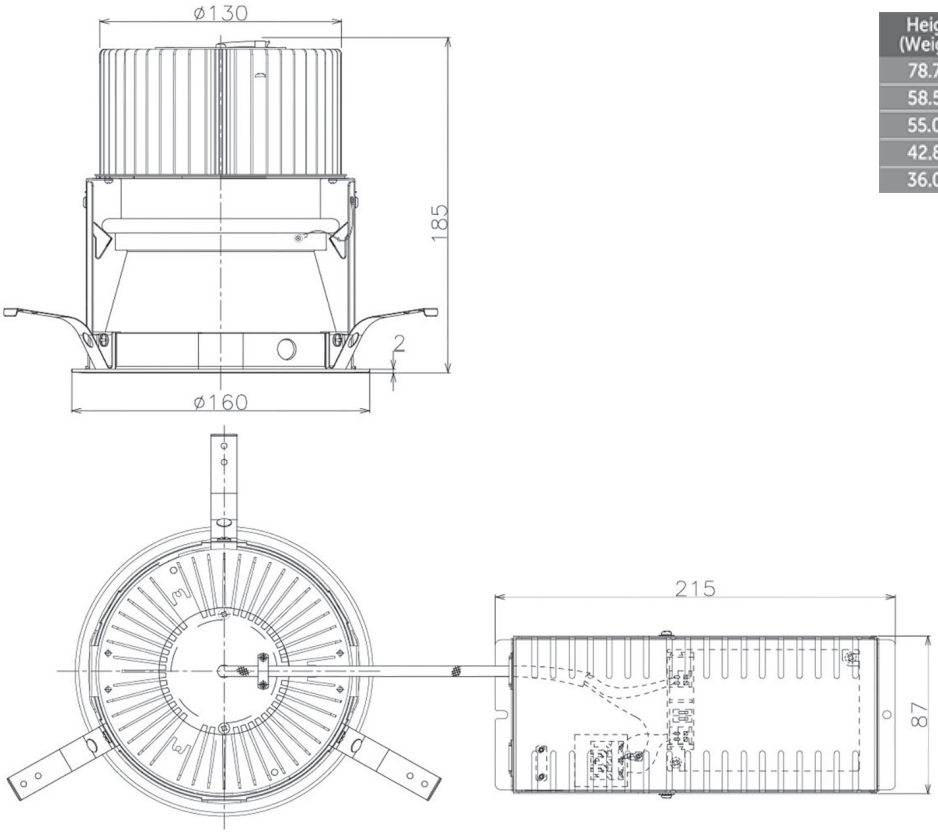

Height (Weight)	Wide flood
78.7W	177 (1.4kg)
58.5W	177 (1.4kg)
55.0W	177 (1.4kg)
42.8W	157 (1.1kg)
36.0W	157 (1.1kg)