KOIZUMI
＿違う発想がある

KOIZUMI SANGYO (HK) CORPORATION LTD.
Units A-B, 26th Floor, 8 Hart Avenue, Tsimshatsui, Kowloon, Hong Kong
Tel: +852-2714 3773 Fax: +852-2714 0006

Item no. DD100-1920DW9035D

Series Name: Φ100 Spark (Deep Cone)

With Dark Mirror Reflector

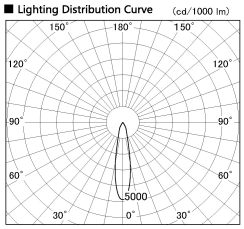

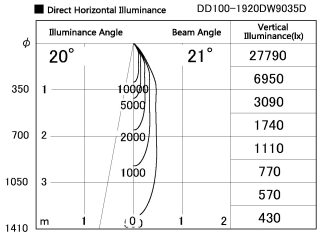
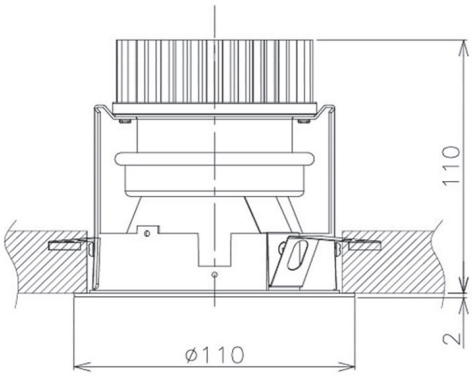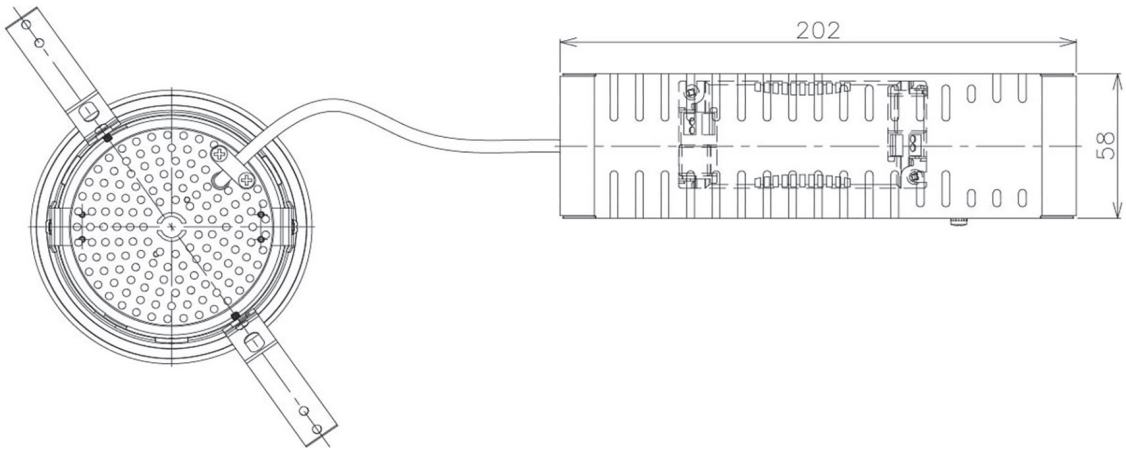
Installation	Recessed mount
Type	Φ100 Spark (Deep Cone)
Fixture wattage	18.6W
Beam angle	21 deg
Color Temp.	3500K
CRI	Ra>90
Luminous	1424 lm
Body	Dia-cast aluminum
Body finish	N/A
Trim finish	White
Reflector finish	Dark Mirror
IP Rate	IP20
Light source	COB module
Input Voltage	AC220~240V
Dimming Type	Non-Dimmable
Certificate	CE, CCC
Cut Hole	100mm