KOIZUMI
＿違う発想がある

KOIZUMI SANGYO (HK) CORPORATION LTD.
Units A-B, 26th Floor, 8 Hart Avenue, Tsimshatsui, Kowloon, Hong Kong
Tel: +852-2714 3773 Fax: +852-2714 0006

Item no. DD105-1420B9030

Series Name: Φ100 Lens type Adjustable downlight

Installation	Recessed mount
Type	Φ100 Lens type Adjustable downlight
Fixture wattage	14W
Beam angle	22 deg
Color Temp.	3000K
CRI	Ra>90
Luminous	1427 lm
Body	Die-cast aluminum alloy
Body finish	N/A
Trim finish	Black
Reflector finish	N/A
IP Rate	IP20
Light source	COB module
Input Voltage	AC220~240V
Dimming Type	Non-Dimmable
Certificate	CE, CCC
Cut Hole	100mm

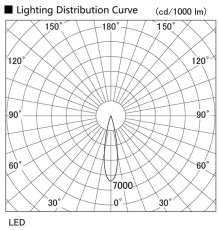

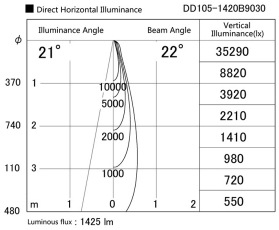

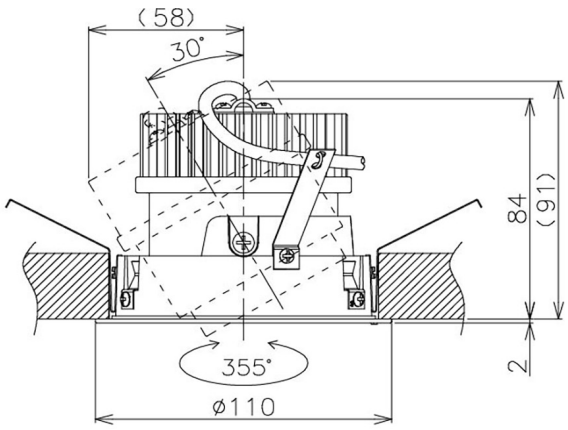
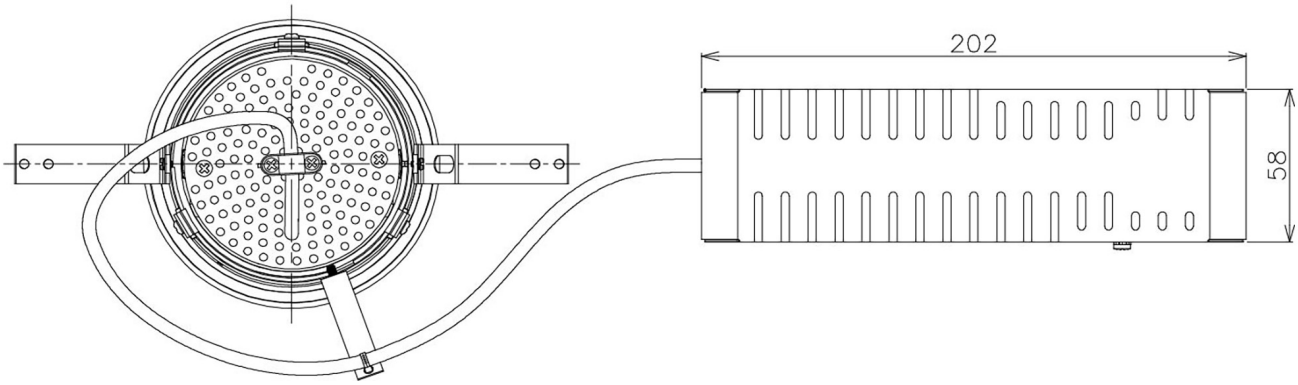
Height (Weight)	
31.8W	127 (0.9kg)
24.3W	127 (0.9kg)
21.0W	92 (0.8kg)
14.0W	92 (0.8kg)