KOIZUMI
＿違う発想がある

KOIZUMI SANGYO (HK) CORPORATION LTD.
Units A-B, 26th Floor, 8 Hart Avenue, Tsimshatsui, Kowloon, Hong Kong
Tel: +852-2714 3773 Fax: +852-2714 0006

Item no. DD105-1415DW9040

Series Name: Φ100 Lens type Adjustable downlight, Antiglare

With Dark Mirror Reflector

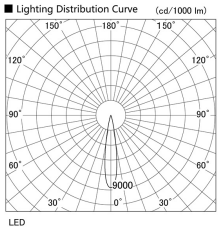

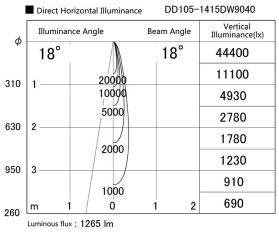

Installation	Recessed mount
Type	Φ100 Lens type Adjustable downlight, Antiglare
Fixture wattage	14W
Beam angle	18 deg
Color Temp.	4000K
CRI	Ra>90
Luminous	1265 lm
Body	Die-cast aluminum alloy
Body finish	N/A
Trim finish	White
Reflector finish	Dark Mirror
IP Rate	IP20
Light source	COB module
Input Voltage	AC220~240V
Dimming Type	Non-Dimmable
Certificate	CE, CCC
Cut Hole	100mm

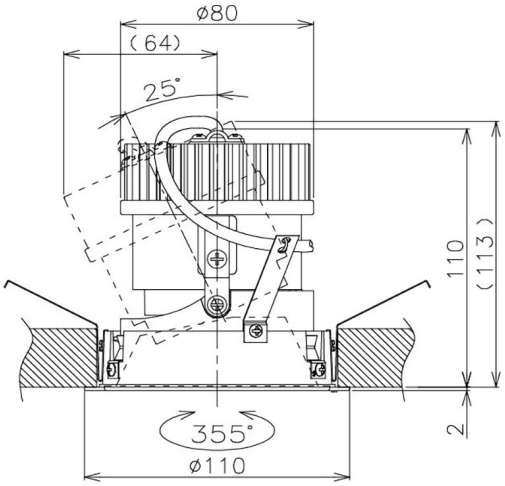
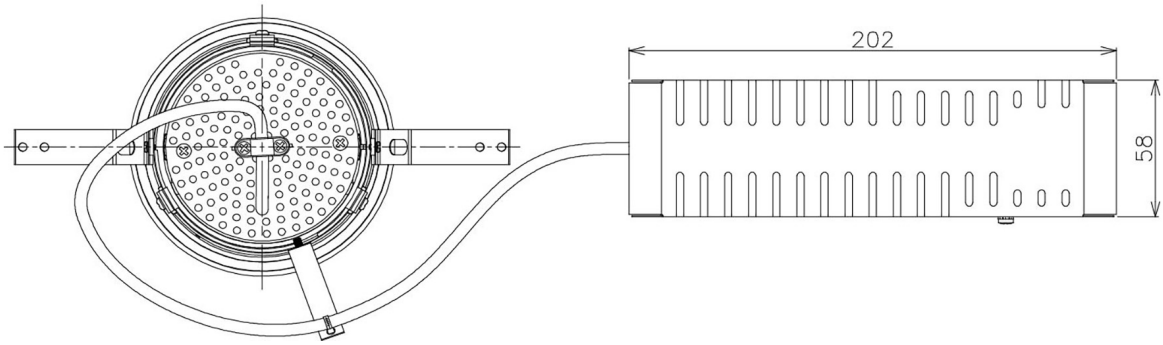
Height (Weight)	
31.8W	152 (0.9kg)
24.3W	152 (0.9kg)
21.0W	115 (0.8kg)
14.0W	115 (0.8kg)