KOIZUMI
違う発想がある

KOIZUMI SANGYO (HK) CORPORATION LTD.
Units A-B, 26th Floor, 8 Hart Avenue, Tsimshatsui, Kowloon, Hong Kong
Tel: +852-2714 3773 Fax: +852-2714 0006

Item no. DD105-2520DB9040

Series Name: Φ100 Lens type Adjustable downlight, Antiglare

With Dark Mirror Reflector

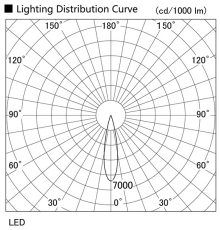

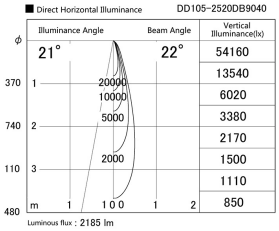

Installation	Recessed mount
Type	Φ100 Lens type Adjustable downlight, Antiglare
Fixture wattage	24.3W
Beam angle	22 deg
Color Temp.	4000K
CRI	Ra>90
Luminous	2185 lm
Body	Die-cast aluminum alloy
Body finish	N/A
Trim finish	Black
Reflector finish	Dark Mirror
IP Rate	IP20
Light source	COB module
Input Voltage	AC220~240V
Dimming Type	Non-Dimmable
Certificate	CE, CCC
Cut Hole	100mm

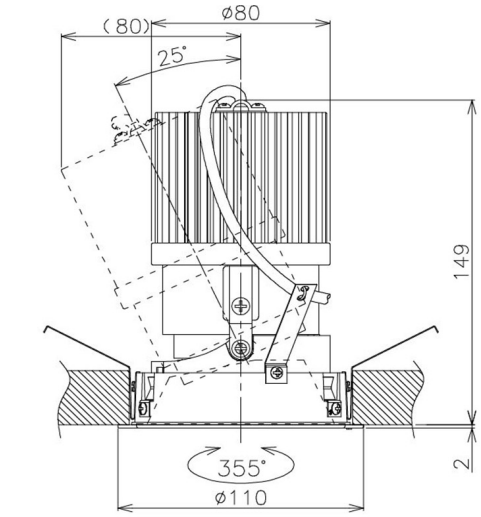
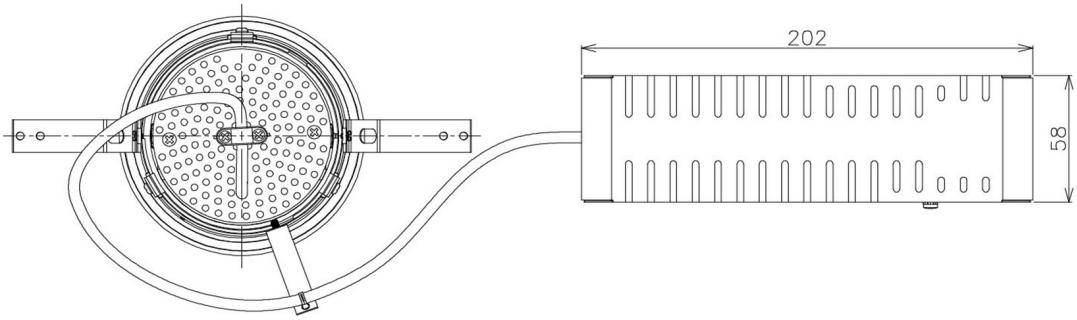
Height (Weight)	
31.8W	152 (0.9kg)
24.3W	152 (0.9kg)
21.0W	115 (0.8kg)
14.0W	115 (0.8kg)