KOIZUMI
＿違う発想がある

KOIZUMI SANGYO (HK) CORPORATION LTD.
Units A-B, 26th Floor, 8 Hart Avenue, Tsimshatsui, Kowloon, Hong Kong
Tel: +852-2714 3773 Fax: +852-2714 0006

Item no. DD105-3220WW9030

Series Name: Φ100 Lens type Adjustable downlight, Antiglare

Installation	Recessed mount
Type	Φ100 Lens type Adjustable downlight, Antiglare
Fixture wattage	31.8W
Beam angle	23 deg
Color Temp.	3000K
CRI	Ra>90
Luminous	2530 lm
Body	Die-cast aluminum alloy
Body finish	N/A
Trim finish	White
Reflector finish	White
IP Rate	IP20
Light source	COB module
Input Voltage	AC220~240V
Dimming Type	Non-Dimmable
Certificate	CCC
Cut Hole	100mm

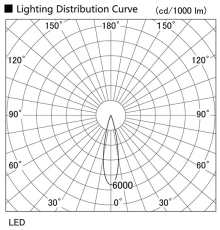

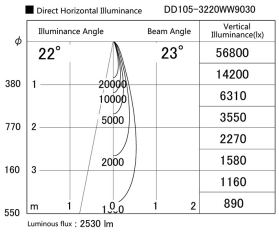

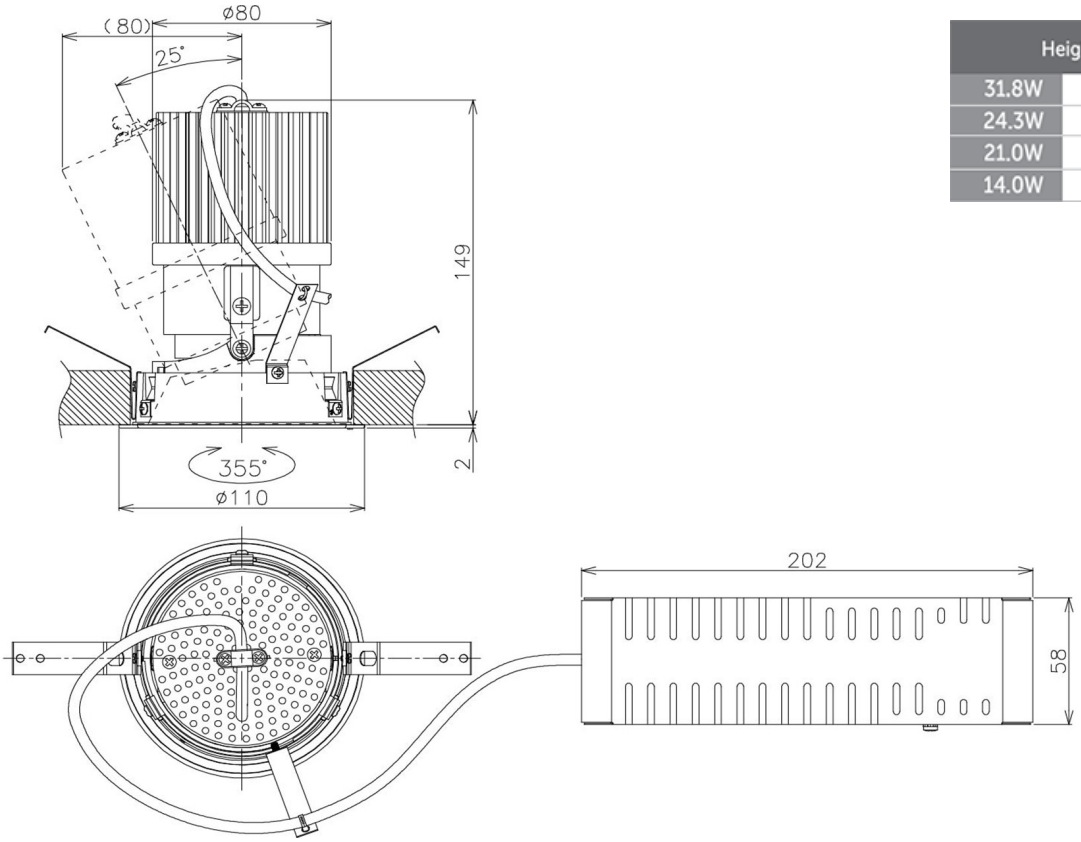

Height (Weight)	
31.8W	152 (0.9kg)
24.3W	152 (0.9kg)
21.0W	115 (0.8kg)
14.0W	115 (0.8kg)