KOIZUMI
＿違う発想がある

KOIZUMI SANGYO (HK) CORPORATION LTD.
Units A-B, 26th Floor, 8 Hart Avenue, Tsimshatsui, Kowloon, Hong Kong
Tel: +852-2714 3773 Fax: +852-2714 0006

Item no. DD118-1325MW9030-DM1

Series Name: Φ58 Lens type adjustable downlight, Antiglare
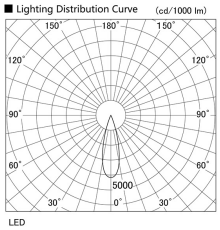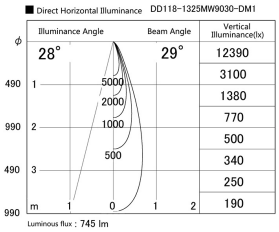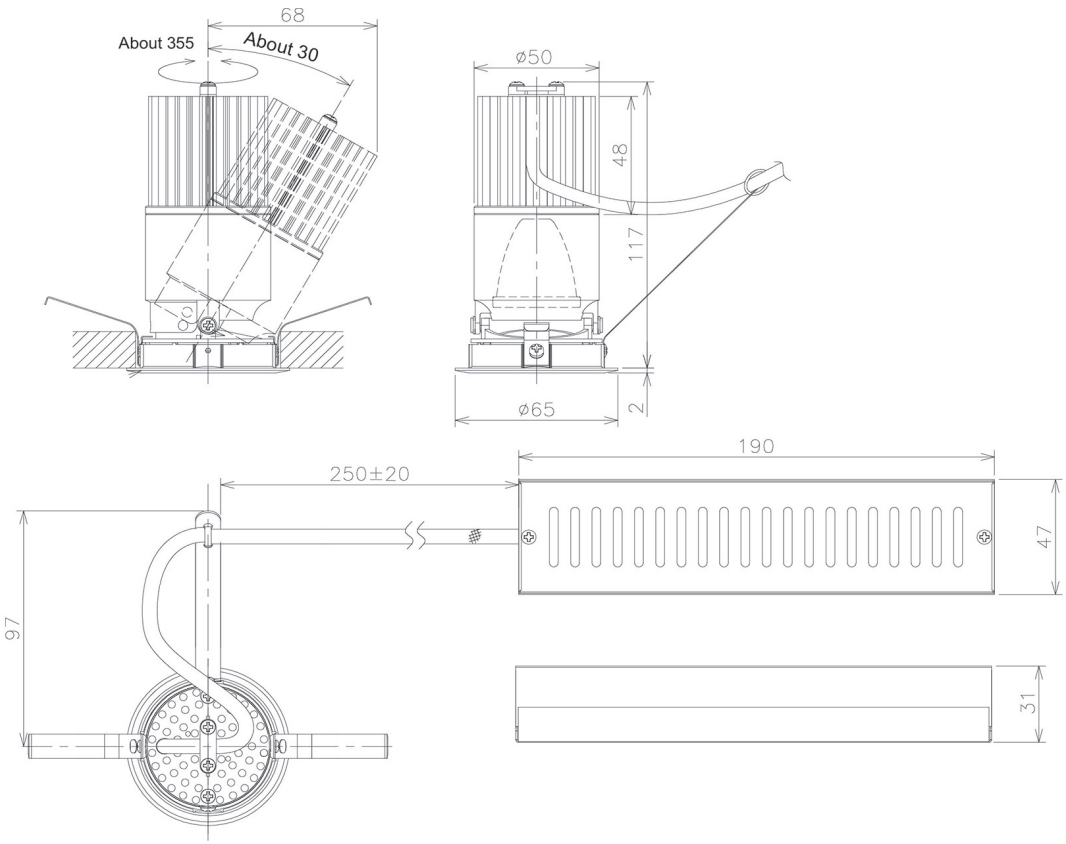
Installation	Recessed mount
Type	Φ58 Lens type adjustable downlight, Antiglare
Fixture wattage	12.6W
Beam angle	29 deg
Color Temp.	3000K
CRI	Ra>90
Luminous	746 lm
Body	Die-cast aluminum alloy
Body finish	N/A
Trim finish	White
Reflector finish	Mirror
IP Rate	IP20
Light source	COB module
Input Voltage	AC220~240V
Dimming Type	1-10V Dimmable
Certificate	CCC
Cut Hole	58mm