KOIZUMI
＿違う発想がある
KOIZUMI SANGYO (HK) CORPORATION LTD.
Units A-B, 26th Floor, 8 Hart Avenue, Tsimshatsui, Kowloon, Hong Kong
Tel: +852-2714 3773 Fax: +852-2714 0006

Item no. DD118-0820MB9027-DM1-O Series Name: Φ58 Lens type adjustable downlight, Antiglare

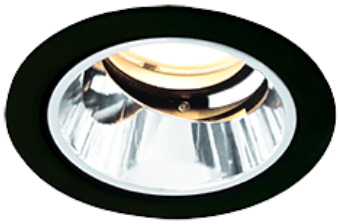
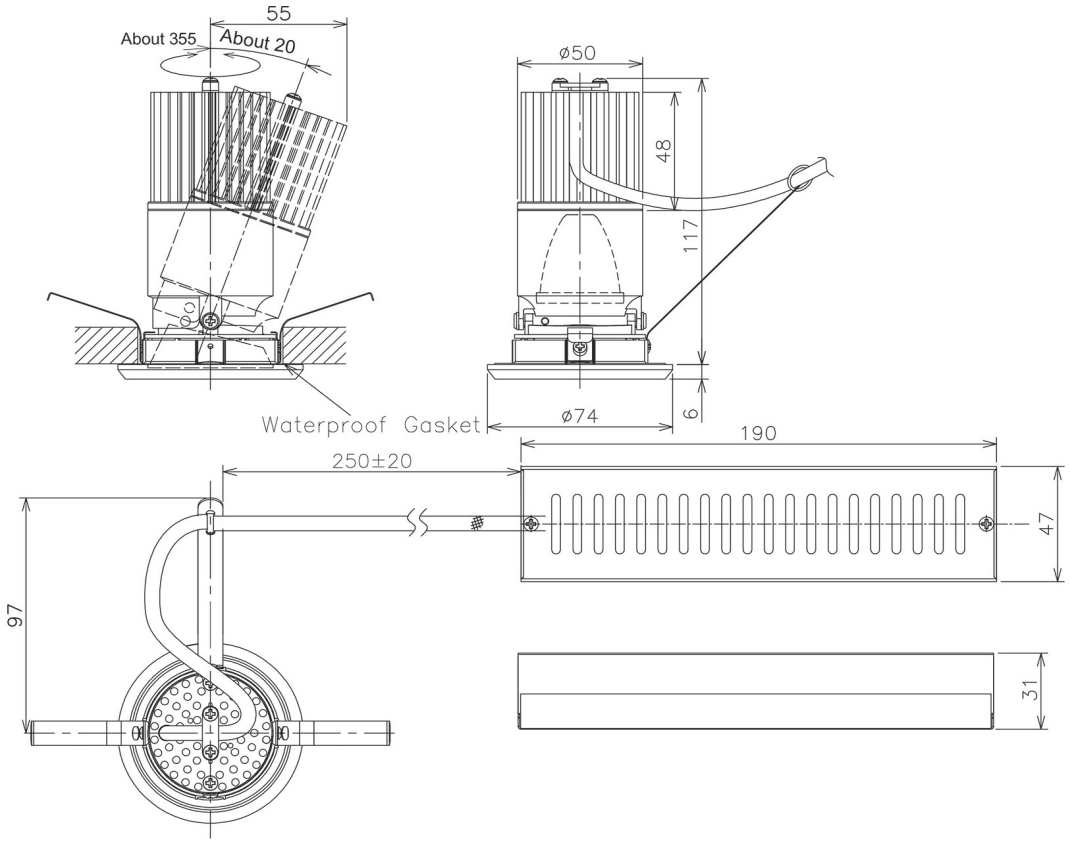
Installation	Recessed mount
Type	
Fixture wattage	8.3W
Beam angle	23 deg
Color Temp.	2700K
CRI	Ra>90
Luminous	491 lm
Body	Die-cast aluminum alloy
Body finish	N/A
Trim finish	Black
Reflector finish	Mirror
IP Rate	IPIP44 from the bottom
Light source	COB module
Input Voltage	AC220~240V
Dimming Type	1-10V Dimmable
Certificate	CCC
Cut Hole	58mm