KOIZUMI
違う発想がある
KOIZUMI SANGYO (HK) CORPORATION LTD.
Units A-B, 26th Floor, 8 Hart Avenue, Tsimshatsui, Kowloon, Hong Kong
Tel: +852-2714 3773 Fax: +852-2714 0006

Item no. US004-0820S9030

Series Name: Spike type landscape spotlight

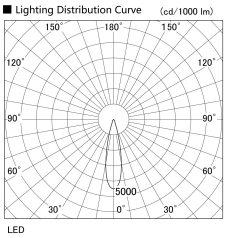

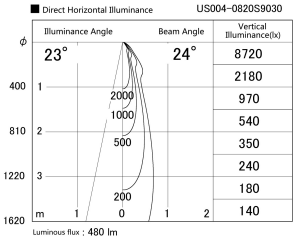
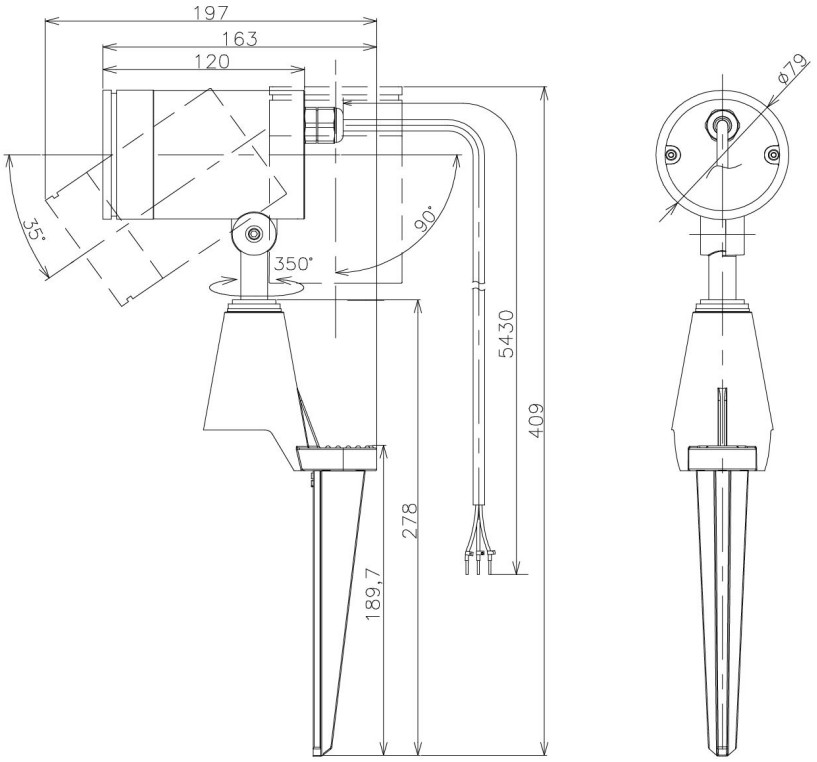
Installation	Spike type
Type	Spike type landscape spotlight
Fixture wattage	7.2W
Beam angle	24 deg
Color Temp.	3000K
CRI	Ra>90
Luminous	481 lm
Body	Die-cast aluminum alloy
Body finish	N/A
Trim finish	Silver
Reflector finish	N/A
IP Rate	IP65
Light source	COB module
Input Voltage	AC220~240V
Dimming Type	Non-Dimmable
Certificate	CE, CCC
Cut Hole	N/A