KOIZUMI
＿違う発想がある

KOIZUMI SANGYO (HK) CORPORATION LTD.
Units A-B, 26th Floor, 8 Hart Avenue, Tsimshatsui, Kowloon, Hong Kong
Tel: +852-2714 3773 Fax: +852-2714 0006

Item no. UB006-GU10B

Series Name: Cylinder type landscape bracket (Up & Down)
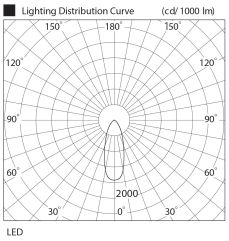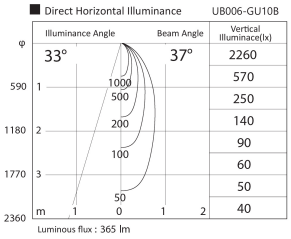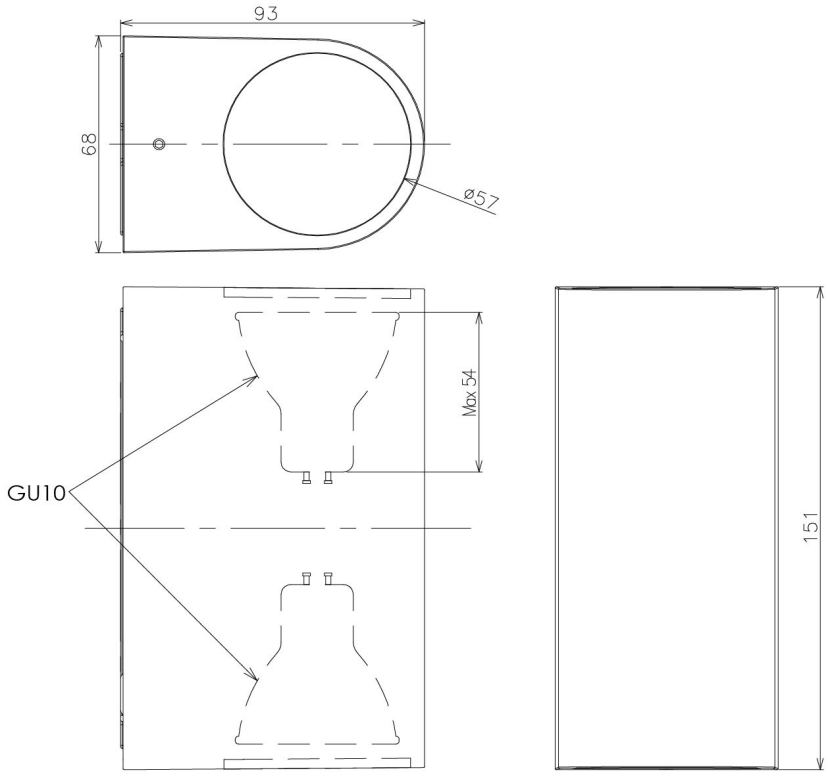
Installation	Cylinder type
Type	
Fixture wattage	3.7 x 2W
Beam angle	37 deg
Color Temp.	2700K
CRI	Ra>80
Luminous	366 lm
Body	Die-cast aluminum alloy
Body finish	N/A
Trim finish	Black
Reflector finish	N/A
IP Rate	IP65
Light source	COB module
Input Voltage	AC220~240V
Dimming Type	Non-Dimmable
Certificate	CE, CCC
Cut Hole	N/A