KOIZUMI
＿違う発想がある

KOIZUMI SANGYO (HK) CORPORATION LTD.
Units A-B, 26th Floor, 8 Hart Avenue, Tsimshatsui, Kowloon, Hong Kong
Tel: +852-2714 3773 Fax: +852-2714 0006

Item no. SD377-0840W9040-LX

Series Name: Versa R-G (UL Track) (SD377-LX)
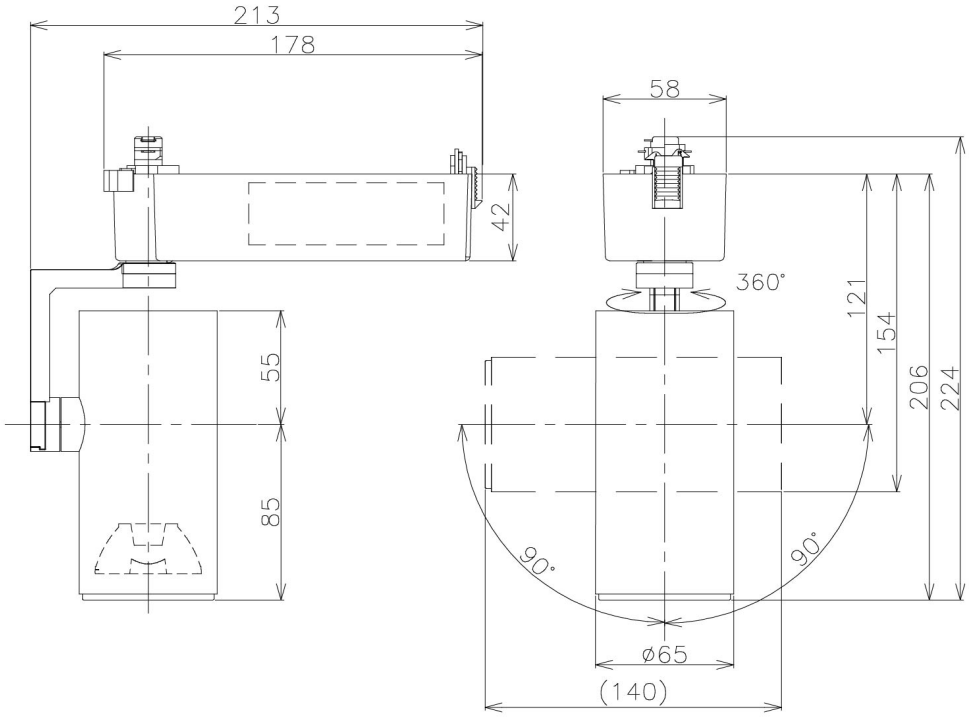
| | |
|---|---|
| Installation | Track mount |
| Type | |
| Fixture wattage | 7.4W |
| Beam angle | 34 deg |
| Color Temp. | 4000K |
| CRI | Ra>90 |
| Luminous | 683 lm |
| Body | Die-cast aluminum alloy |
| Body finish | White |
| Trim finish | White |
| Reflector finish | N/A |
| IP Rate | IP20 |
| Light source | COB module |
| Input Voltage | AC220~240V |
| Dimming Type | Non-Dimmable |
| Certificate | CE, CCC |
| Cut Hole | N/A |