KOIZUMI
＿違う発想がある
KOIZUMI SANGYO (HK) CORPORATION LTD.
Units A-B, 26th Floor, 8 Hart Avenue, Tsimshatsui, Kowloon, Hong Kong
Tel: +852-2714 3773 Fax: +852-2714 0006

Item no. SD377-1415B9040-LX

Series Name: Versa R-G (UL Track) (SD377-LX)
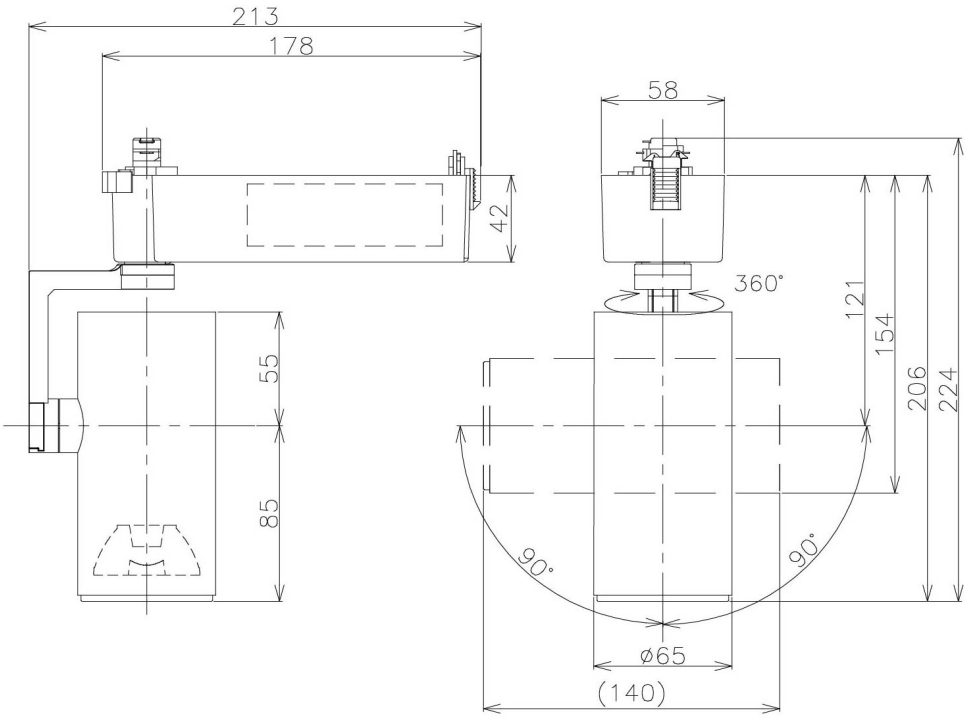
Installation	Track mount
Type	
Fixture wattage	14W
Beam angle	20 deg
Color Temp.	4000K
CRI	Ra>90
Luminous	1309 lm
Body	Die-cast aluminum alloy
Body finish	Black
Trim finish	Black
Reflector finish	N/A
IP Rate	IP20
Light source	COB module
Input Voltage	AC220~240V
Dimming Type	Non-Dimmable
Certificate	CE, CCC
Cut Hole	N/A