KOIZUMI
＿違う発想がある

KOIZUMI SANGYO (HK) CORPORATION LTD.
Units A-B, 26th Floor, 8 Hart Avenue, Tsimshatsui, Kowloon, Hong Kong
Tel: +852-2714 3773 Fax: +852-2714 0006

Item no. SD376-2555B9035-IK-LX

Series Name: Versa L-G Tracklight (Lens Type In-Track) (SD376-IK-LX)

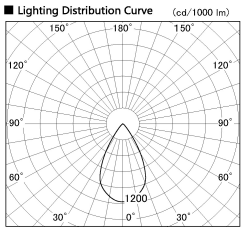

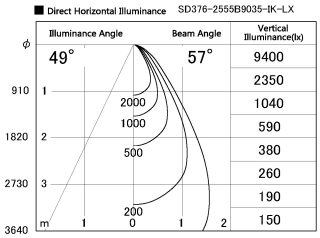
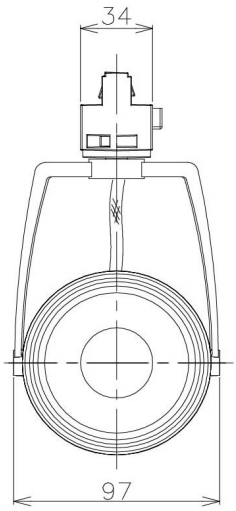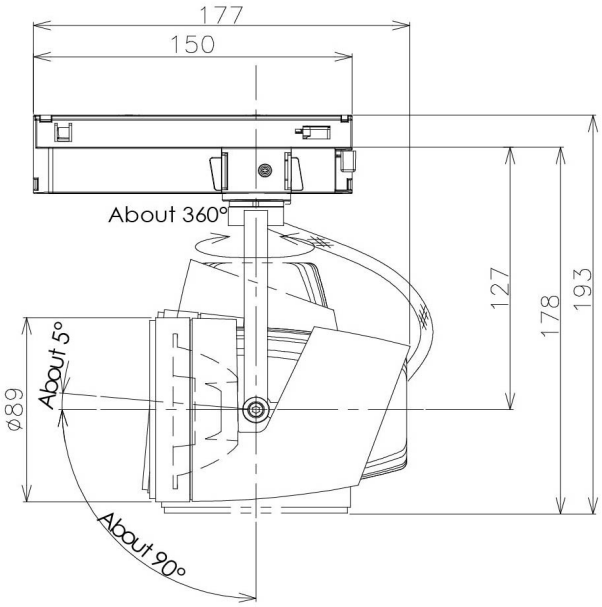
Installation	Track mount
Type	
Fixture wattage	24W
Beam angle	57 deg
Color Temp.	3500K
CRI	Ra>90
Luminous	1998 lm
Body	Die-cast aluminum alloy
Body finish	Black
Trim finish	Black
Reflector finish	N/A
IP Rate	IP20
Light source	COB module
Input Voltage	AC220~240V
Dimming Type	Non-Dimmable
Certificate	CE, CCC
Cut Hole	N/A