KOIZUMI
＿違う発想がある

KOIZUMI SANGYO (HK) CORPORATION LTD.
Units A-B, 26th Floor, 8 Hart Avenue, Tsimshatsui, Kowloon, Hong Kong
Tel: +852-2714 3773 Fax: +852-2714 0006

Item no. SD380-2030B9030

Series Name: High power compact tracklight (SD380)

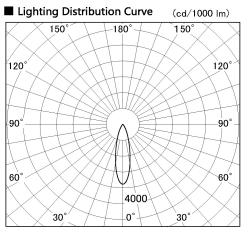

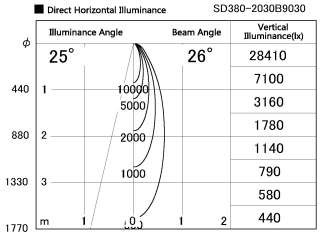
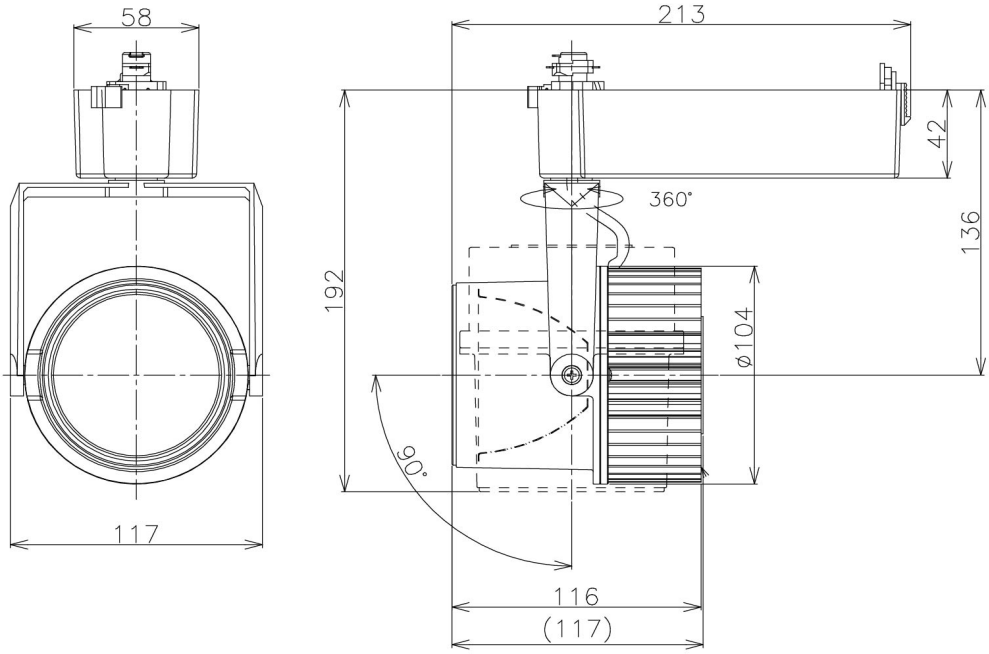
Installation	Track Mount
Type	High power compact tracklight (SD380)
Fixture wattage	20W
Beam angle	26 deg
Color Temp.	3000K
CRI	Ra>90
Luminous	2345 lm
Body	Die-castaluminumalloy
Body finish	White
Trim finish	White
Reflector finish	N/A
IP Rate	IP20
Light source	COB module
Input Voltage	AC220~240V
Dimming Type	Non-Dimmable
Certificate	CE,CCC
Cut Hole	N/A