KOIZUMI
＿違う発想がある

KOIZUMI SANGYO (HK) CORPORATION LTD.
Units A-B, 26th Floor, 8 Hart Avenue, Tsimshatsui, Kowloon, Hong Kong
Tel: +852-2714 3773 Fax: +852-2714 0006

Item no. SD287-0625W9030-DMWL

Series Name: Cledy micro tracklight (In-Track) SD287 (48V)
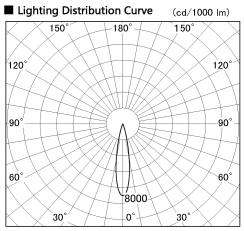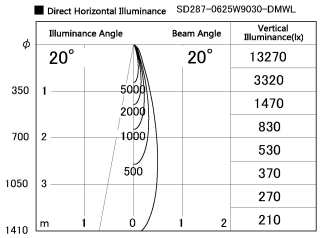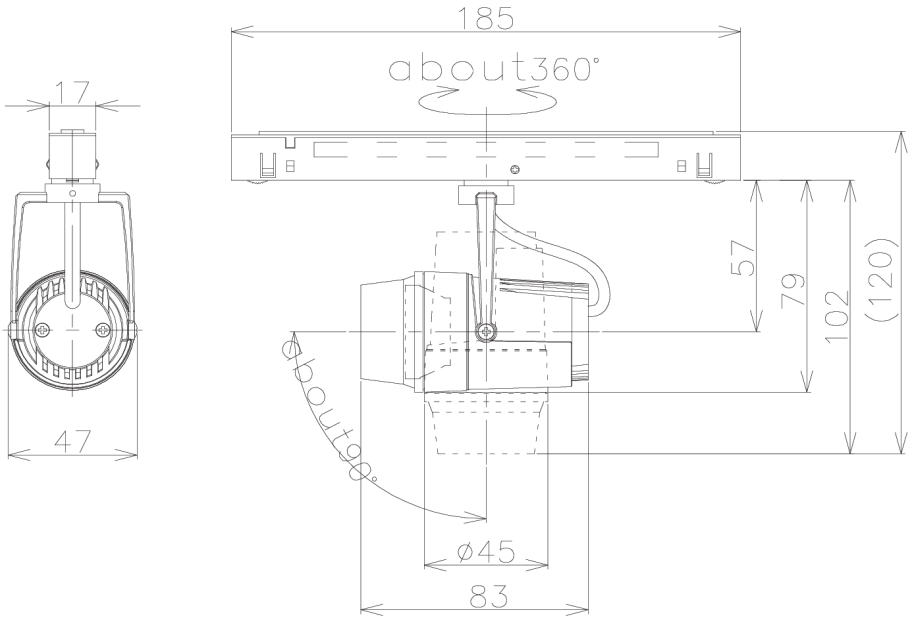
Installation	Track mount
Type	Cledy micro tracklight (In-Track) SD287 (48V)
Fixture wattage	6W
Beam angle	20 deg
Color Temp.	3000K
CRI	Ra>90
Luminous	458 lm
Body	Die-cast alluminium alloy
Body finish	White
Trim finish	White
Reflector finish	N/A
IP Rate	IP20
Light source	COB module
Input Voltage	DC 48V
Dimming Type	Wireless Dimmable
Certificate	CE/CCC
Cut Hole	N/A