KOIZUMI
＿違う発想がある

KOIZUMI SANGYO (HK) CORPORATION LTD.
Units A-B, 26th Floor, 8 Hart Avenue, Tsimshatsui, Kowloon, Hong Kong
Tel: +852-2714 3773 Fax: +852-2714 0006

Item no. DD086-1215SB35-DM

Series Name: Cledy Micro Adjustable (DD086)
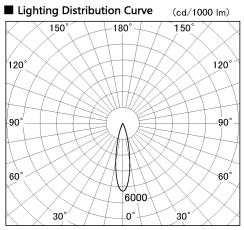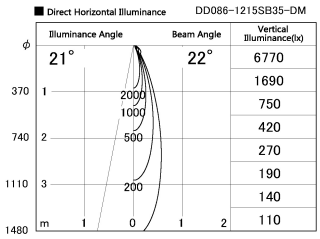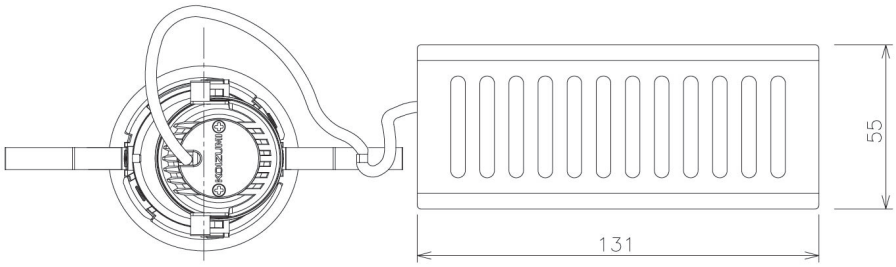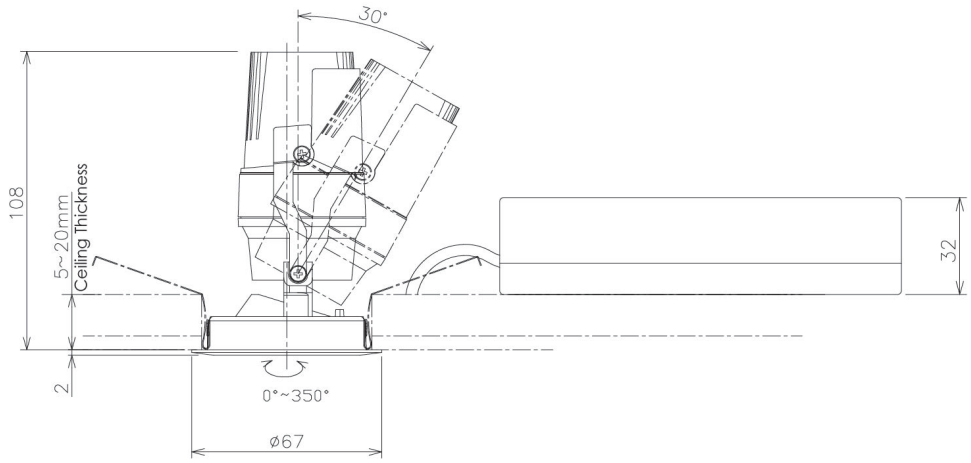
Installation	Recessed
Type	
Fixture wattage	8.5W
Beam angle	20 deg
Color Temp.	3500K
CRI	Ra>80
Luminous	330 lm
Body	Die-cast aluminum alloy
Body finish	N/A
Trim finish	Black
Reflector finish	Silver
IP Rate	IP20
Light source	COB module
Input Voltage	AC220~240V
Dimming Type	Dimmable
Certificate	CE, CCC
Cut Hole	60