KOIZUMI
＿違う発想がある

KOIZUMI SANGYO (HK) CORPORATION LTD.
Units A-B, 26th Floor, 8 Hart Avenue, Tsimshatsui, Kowloon, Hong Kong
Tel: +852-2714 3773 Fax: +852-2714 0006

# Item no. DD086-1230SB35-DM

# Series Name: Cledy Micro Adjustable (DD086)
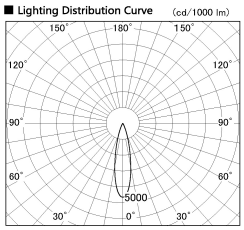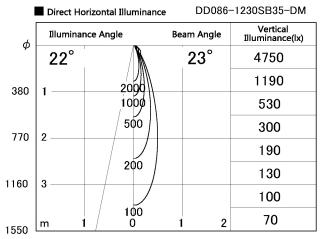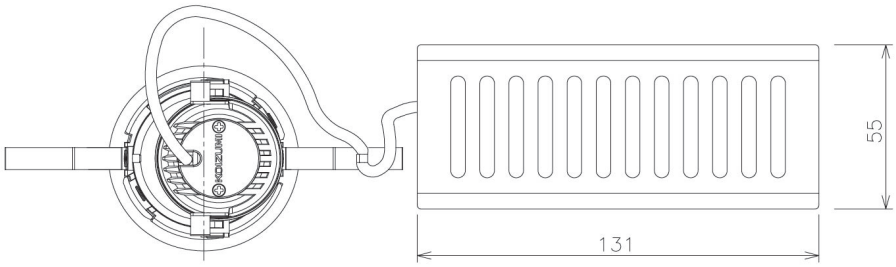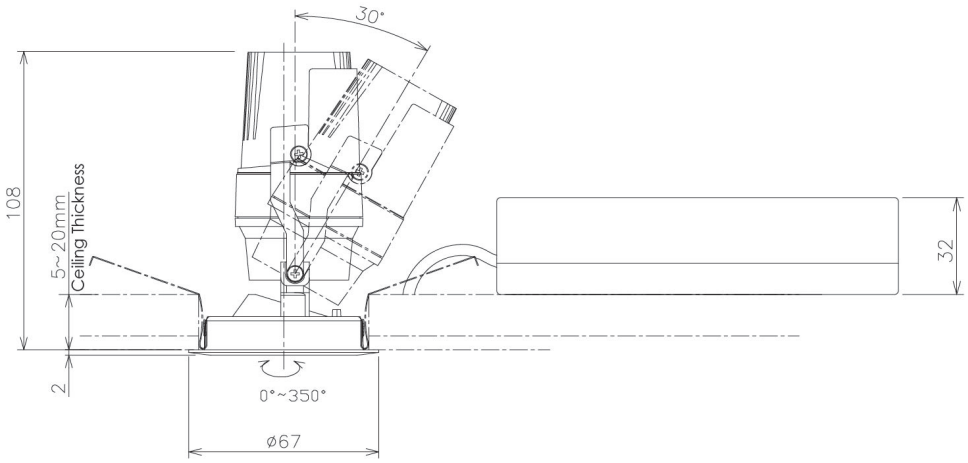
| | |
|---|---|
| Installation | Recessed |
| Type | |
| Fixture wattage | 8.5W |
| Beam angle | 25 deg |
| Color Temp. | 3500K |
| CRI | Ra>80 |
| Luminous | 255 lm |
| Body | Die-cast aluminum alloy |
| Body finish | N/A |
| Trim finish | Black |
| Reflector finish | Silver |
| IP Rate | IP20 |
| Light source | COB module |
| Input Voltage | AC220~240V |
| Dimming Type | Dimmable |
| Certificate | CE, CCC |
| Cut Hole | 60 |