KOIZUMI
＿違う発想がある

KOIZUMI SANGYO (HK) CORPORATION LTD.
Units A-B, 26th Floor, 8 Hart Avenue, Tsimshatsui, Kowloon, Hong Kong
Tel: +852-2714 3773 Fax: +852-2714 0006

Item no. DD085-1230SW27-DM

Series Name: Cledy Micro Fix (DD085)
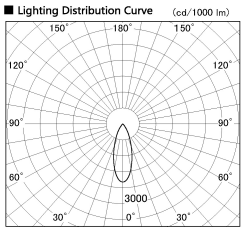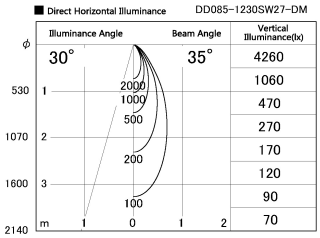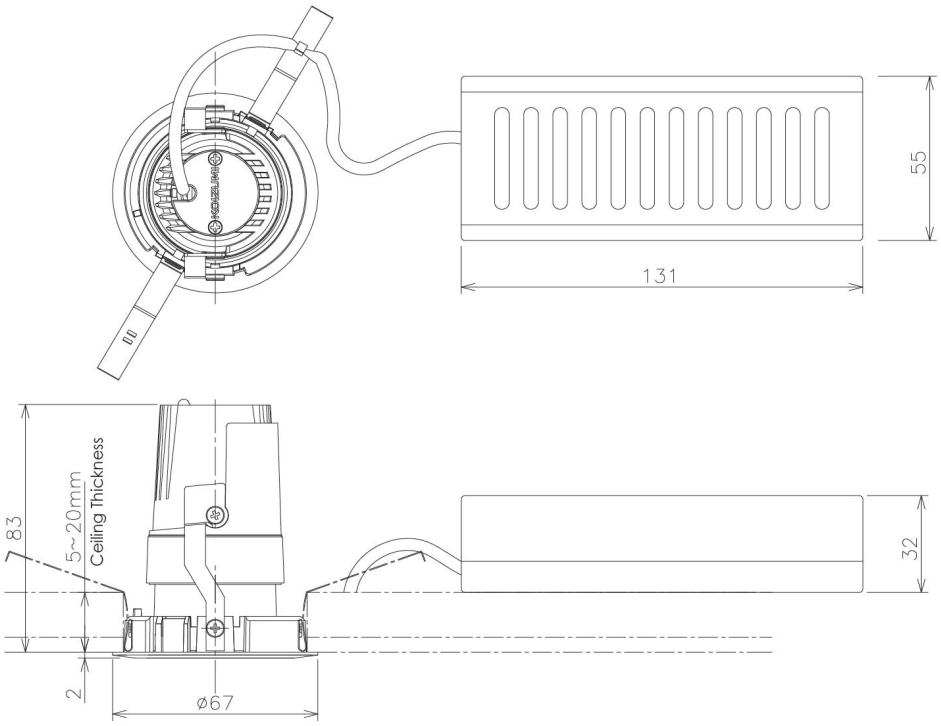
Installation	Recessed
Type	
Fixture wattage	8.5W
Beam angle	35 deg
Color Temp.	2700K
CRI	Ra>80
Luminous	485 lm
Body	Die-cast aluminum alloy
Body finish	N/A
Trim finish	White
Reflector finish	Silver
IP Rate	IP20
Light source	COB module
Input Voltage	AC220~240V
Dimming Type	Dimmable
Certificate	CE, CCC
Cut Hole	60