KOIZUMI
＿違う発想がある

KOIZUMI SANGYO (HK) CORPORATION LTD.
Units A-B, 26th Floor, 8 Hart Avenue, Tsimshatsui, Kowloon, Hong Kong
Tel: +852-2714 3773 Fax: +852-2714 0006

Item no. DD098-2515MB8530D

Series Name: Φ150 Spark (Deep Cone)

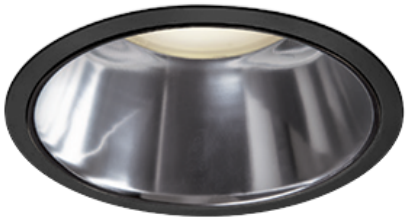

Installation	Recessed mount
Type	
Fixture wattage	23W
Beam angle	15 deg
Color Temp.	3000K
CRI	Ra>85
Luminous	2203 lm
Body	Die-cast aluminum alloy
Body finish	N/A
Trim finish	Black
Reflector finish	Mirror
IP Rate	IP20
Light source	COB module
Input Voltage	AC220~240V
Dimming Type	Non-Dimmable
Certificate	CE, CCC
Cut Hole	150mm

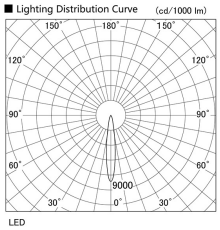

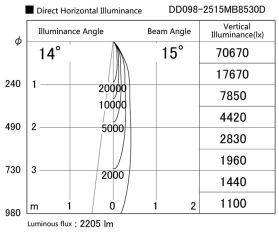

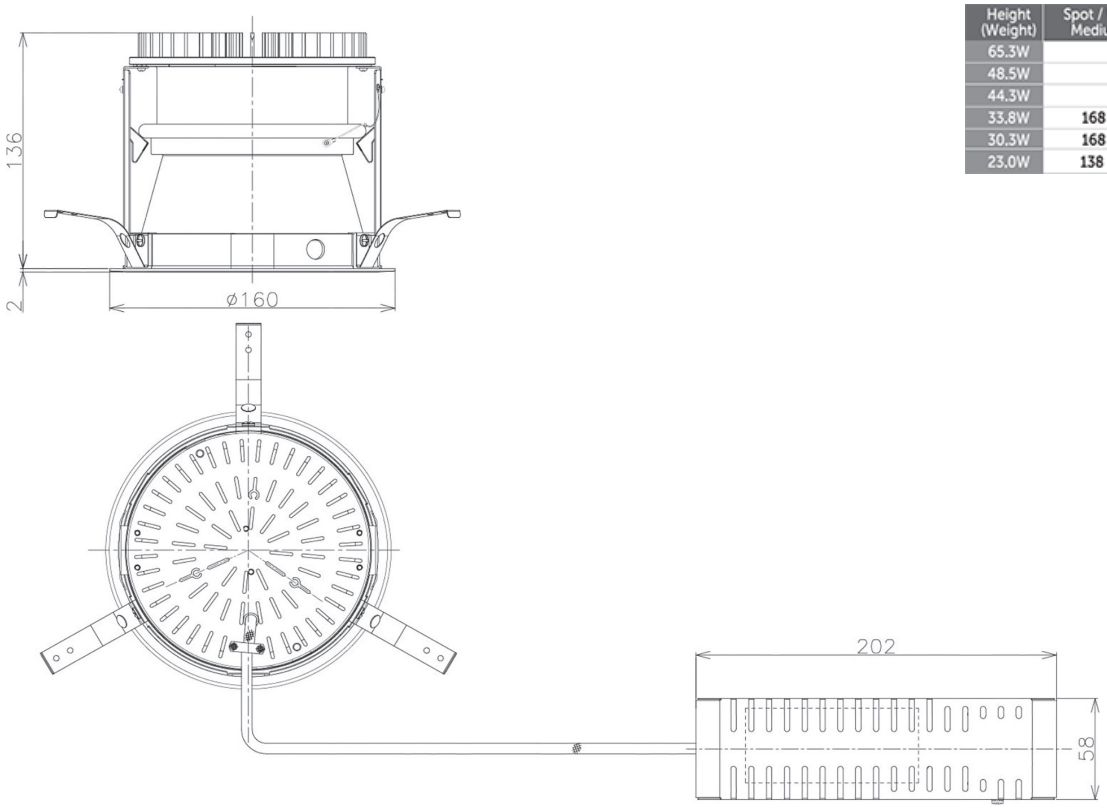

Height (Weight)	Spot / Medium / Medium flood	Wide flood
65.3W	177 (1.4kg)	
48.5W	177 (1.5kg)	
44.3W	157 (1.2kg)	
33.8W	168 (1.1kg)	157 (1.1kg)
30.3W	168 (1.1kg)	157 (1.1kg)
23.0W	138 (0.9kg)	127 (0.9kg)