KOIZUMI
＿違う発想がある

KOIZUMI SANGYO (HK) CORPORATION LTD.
Units A-B, 26th Floor, 8 Hart Avenue, Tsimshatsui, Kowloon, Hong Kong
Tel: +852-2714 3773 Fax: +852-2714 0006

Item no. DD136-2530WB9040-R

Series Name: Cledy versa R-G Antiglare (DD136-AG-R)

White Reflector

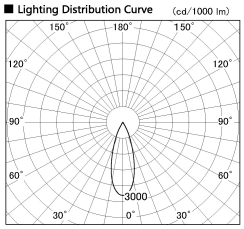

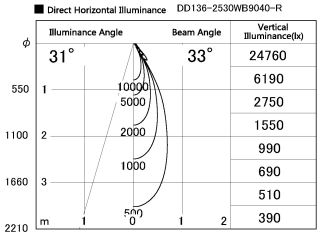
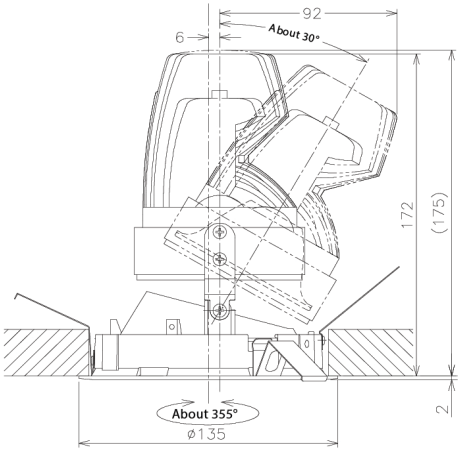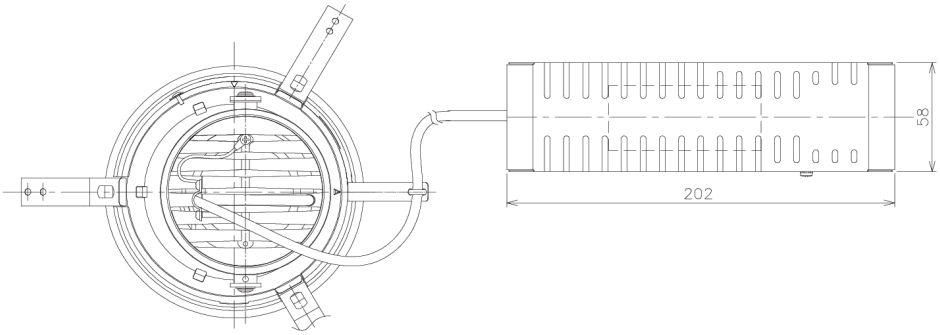
Installation	Recessed mount
Type	Cledy versa R-G Antiglare (DD136-AG-R)
Fixture wattage	23W
Beam angle	32 deg
Color Temp.	4000K
CRI	Ra>90
Luminous	2232 lm
Body	Die-cast aluminum alloy
Body finish	N/A
Trim finish	Black
Reflector finish	White
IP Rate	IP20
Light source	COB module
Input Voltage	AC220~240V
Dimming Type	Non-Dimmable
Certificate	CE, CCC
Cut Hole	125mm