KOIZUMI
＿違う発想がある

KOIZUMI SANGYO (HK) CORPORATION LTD.
Units A-B, 26th Floor, 8 Hart Avenue, Tsimshatsui, Kowloon, Hong Kong
Tel: +852-2714 3773 Fax: +852-2714 0006

Item no. DD126-2025B9040-LX

Series Name: Cledy versa L-G (DD126-LX)
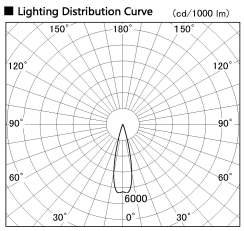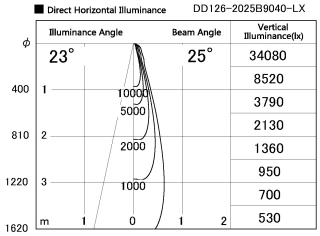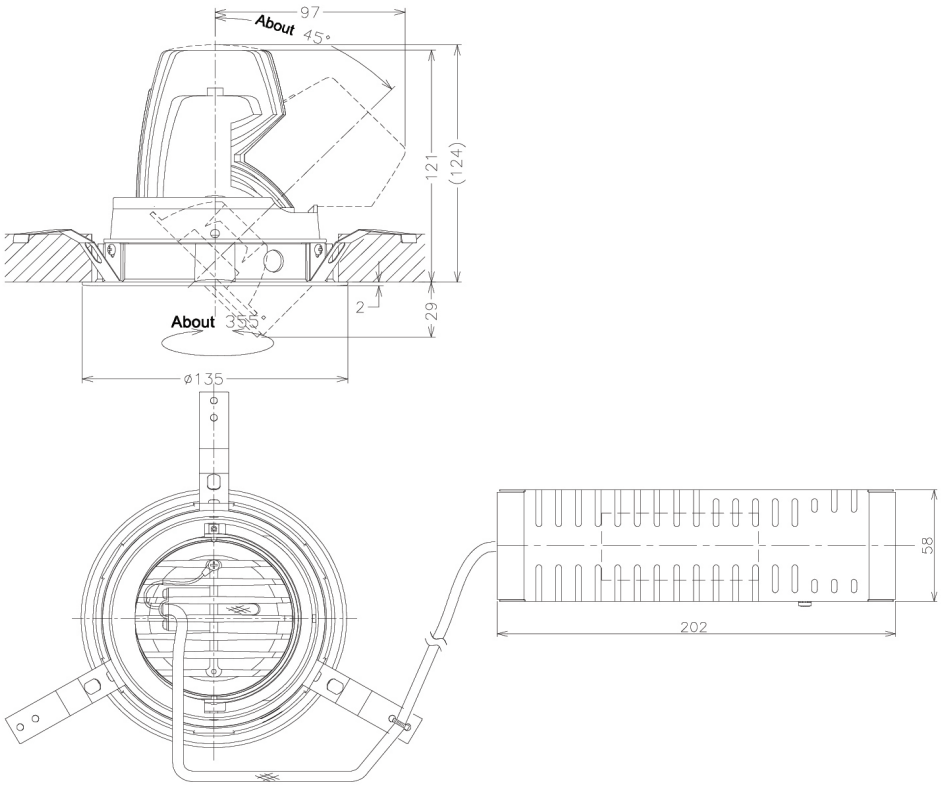
Installation	Recessed mount
Type	High-efficiency Lens type adjustable downlight
Fixture wattage	18.6W
Beam angle	25deg
Color Temp.	4000K
CRI	Ra>90
Luminous	1663 lm
Body	Die-castaluminumalloy
Body finish	N/A
Trim finish	Black
Reflector finish	N/A
IP Rate	IP20
Light source	COB module
Input Voltage	AC220~240V
Dimming Type	Non-Dimmable
Certificate	CE,CCC
Cut Hole	125mm