KOIZUMI
＿違う発想がある

KOIZUMI SANGYO (HK) CORPORATION LTD.
Units A-B, 26th Floor, 8 Hart Avenue, Tsimshatsui, Kowloon, Hong Kong
Tel: +852-2714 3773 Fax: +852-2714 0006

Item no. DD136-2040W9040-R

Series Name: Cledy versa R-G (DD136-R)
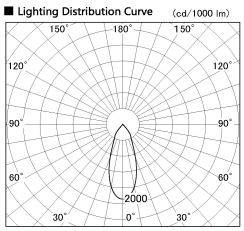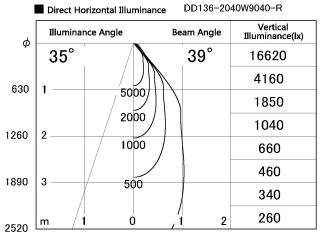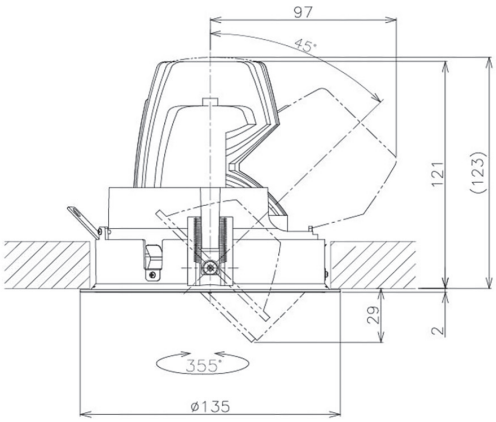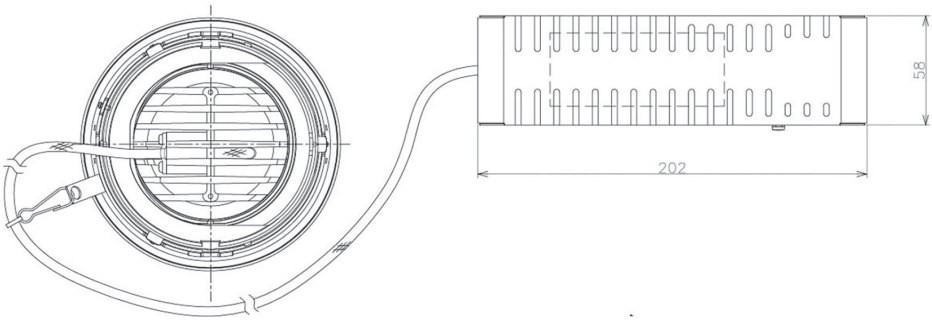
Installation	Recessed mount
Type	Extra high-efficiency adjustable downlight
Fixture wattage	20W
Beam angle	39 deg
Color Temp.	4000K
CRI	Ra>90
Luminous	2196 lm
Body	Die-cast aluminum alloy
Body finish	N/A
Trim finish	White
Reflector finish	N/A
IP Rate	IP20
Light source	COB module
Input Voltage	AC220~240V
Dimming Type	Non-Dimmable
Certificate	CE, CCC
Cut Hole	125mm