KOIZUMI
＿違う発想がある

KOIZUMI SANGYO (HK) CORPORATION LTD.
Units A-B, 26th Floor, 8 Hart Avenue, Tsimshatsui, Kowloon, Hong Kong
Tel: +852-2714 3773 Fax: +852-2714 0006

Item no. DD139-2050MW9035

Series Name: Cledy spark (Normal cone) (DD139)
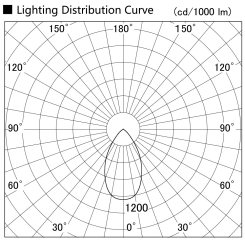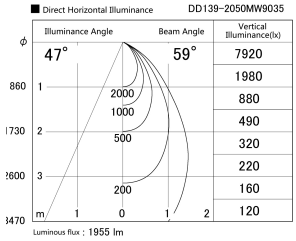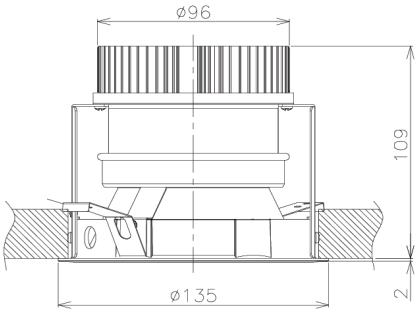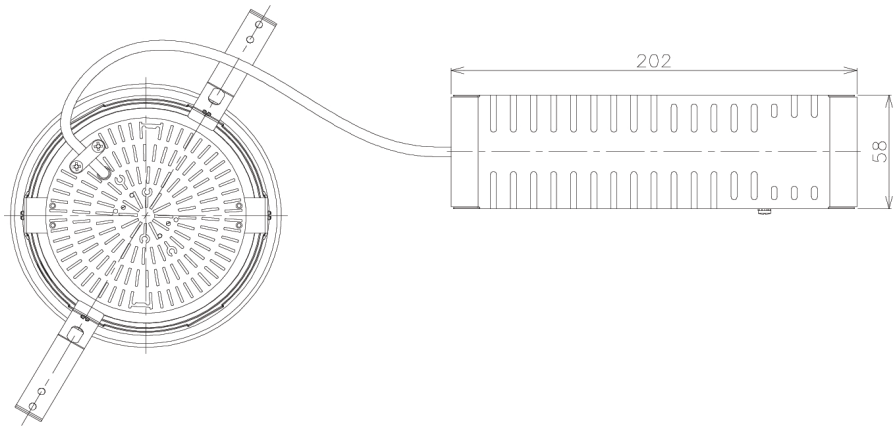
Installation	Recessed mount
Type	Fixed downlight Φ125
Fixture wattage	21W
Beam angle	59
Color Temp.	3500K
CRI	Ra>90
Luminous	1953 lm
Body	Die-castaluminumalloy
Body finish	N/A
Trim finish	White
Reflector finish	Mirror
IP Rate	IP20
Light source	COB module
Input Voltage	AC220~240V
Dimming Type	Non-Dimmable
Certificate	CE,CCC
Cut Hole	125mm