KOIZUMI
＿違う発想がある

KOIZUMI SANGYO (HK) CORPORATION LTD.
Units A-B, 26th Floor, 8 Hart Avenue, Tsimshatsui, Kowloon, Hong Kong
Tel: +852-2714 3773 Fax: +852-2714 0006

Item no. DD140-0830DW9035D

Series Name: Cledy spark (Deep cone) (DD140-D)

With Dark Mirror Reflector

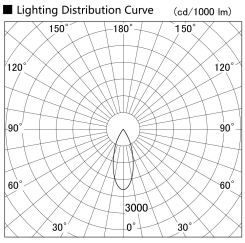

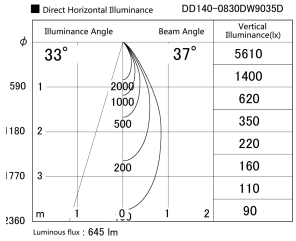
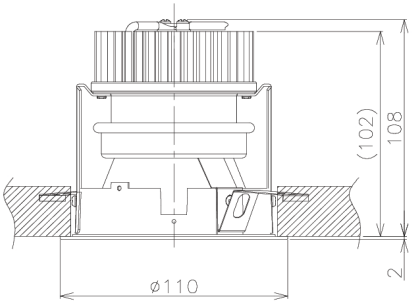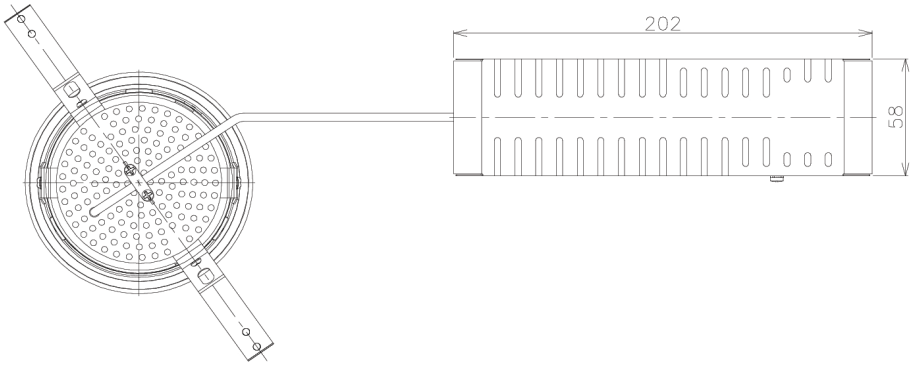
Installation	Recessed mount
Type	Fixed downlight Φ100
Fixture wattage	7.5W
Beam angle	37
Color Temp.	3500K
CRI	Ra>90
Luminous	646 lm
Body	Die-castaluminumalloy
Body finish	N/A
Trim finish	White
Reflector finish	Dark Mirror
IP Rate	IP20
Light source	COB module
Input Voltage	AC220~240V
Dimming Type	Non-Dimmable
Certificate	CE,CCC
Cut Hole	100mm