KOIZUMI
＿違う発想がある

KOIZUMI SANGYO (HK) CORPORATION LTD.
Units A-B, 26th Floor, 8 Hart Avenue, Tsimshatsui, Kowloon, Hong Kong
Tel: +852-2714 3773 Fax: +852-2714 0006

Item no. DD155-2035MW9040

Series Name: AMMA High-efficiency Lens type Antiglare downlight (DD155-AG)
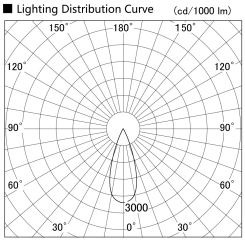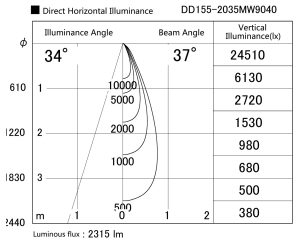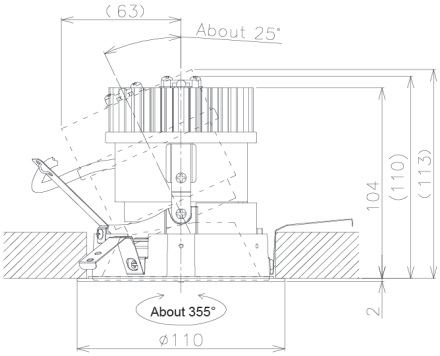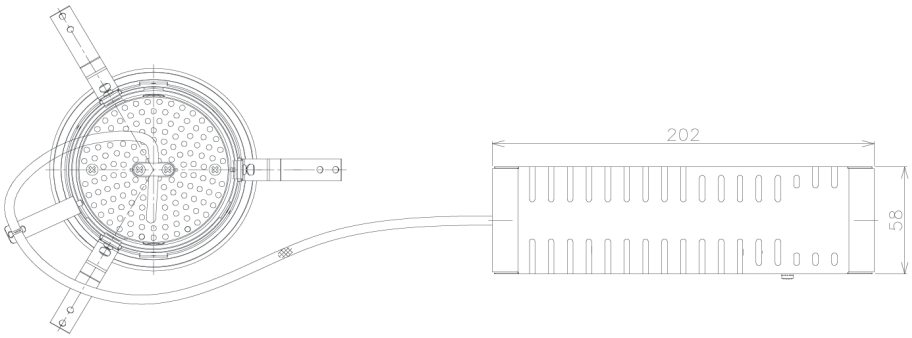
Installation	Recessed mount
Type	Φ100 Lens type downlight : Antiglare type
Fixture wattage	21W
Beam angle	37deg
Color Temp.	4000K
CRI	Ra>90
Luminous	2316 lm
Body	Die-castaluminumalloy
Body finish	N/A
Trim finish	White
Reflector finish	Mirror
IP Rate	IP20
Light source	COB module
Input Voltage	AC220~240V
Dimming Type	Non-Dimmable
Certificate	CE,CCC
Cut Hole	100mm