KOIZUMI
＿違う発想がある

KOIZUMI SANGYO (HK) CORPORATION LTD.
Units A-B, 26th Floor, 8 Hart Avenue, Tsimshatsui, Kowloon, Hong Kong
Tel: +852-2714 3773 Fax: +852-2714 0006

# Item no. SD279-1535B9035S

# Series Name: AMMA High Power compact tracklight (SD279)

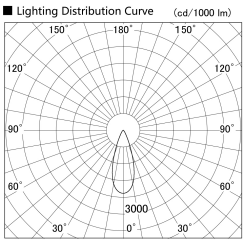


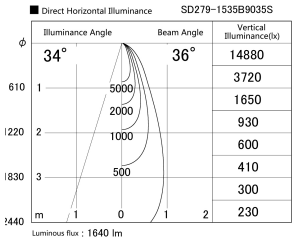

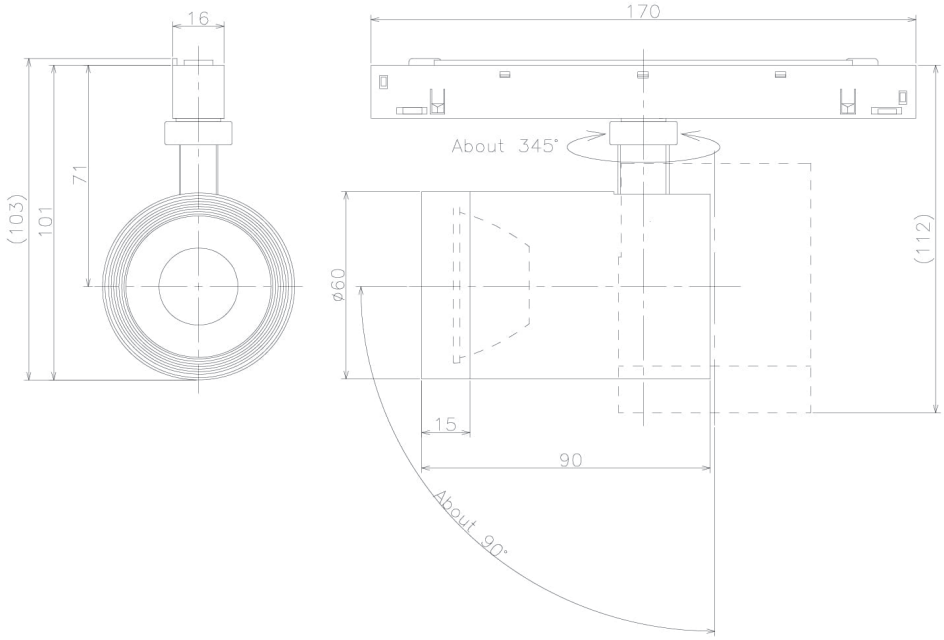
| | |
|---|---|
| Installation | Track light |
| Type | Lens type Cylinder tracklight type (DC 48V) |
| Fixture wattage | 14W |
| Beam angle | 36deg |
| Color Temp. | 3500K |
| CRI | Ra>90 |
| Luminous | 1641 lm |
| Body | Die-cast aluminum alloy |
| Body finish | Black |
| Trim finish | Black |
| Reflector finish | N/A |
| IP Rate | IP20 |
| Light source | COB module |
| Input Voltage | DC 48V |
| Dimming Type | Non-dimmable |
| Certificate | CE, CCC |
| Cut Hole | N/A |