KOIZUMI
＿違う発想がある

KOIZUMI SANGYO (HK) CORPORATION LTD.
Units A-B, 26th Floor, 8 Hart Avenue, Tsimshatsui, Kowloon, Hong Kong
Tel: +852-2714 3773 Fax: +852-2714 0006

Item no. SD279-1535B9035S

Series Name: AMMA High Power compact tracklight (SD279)
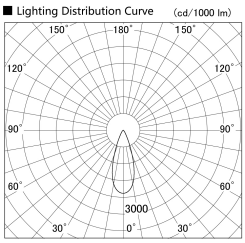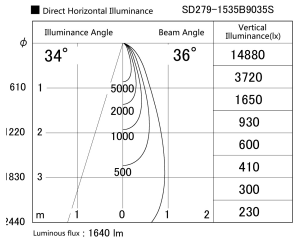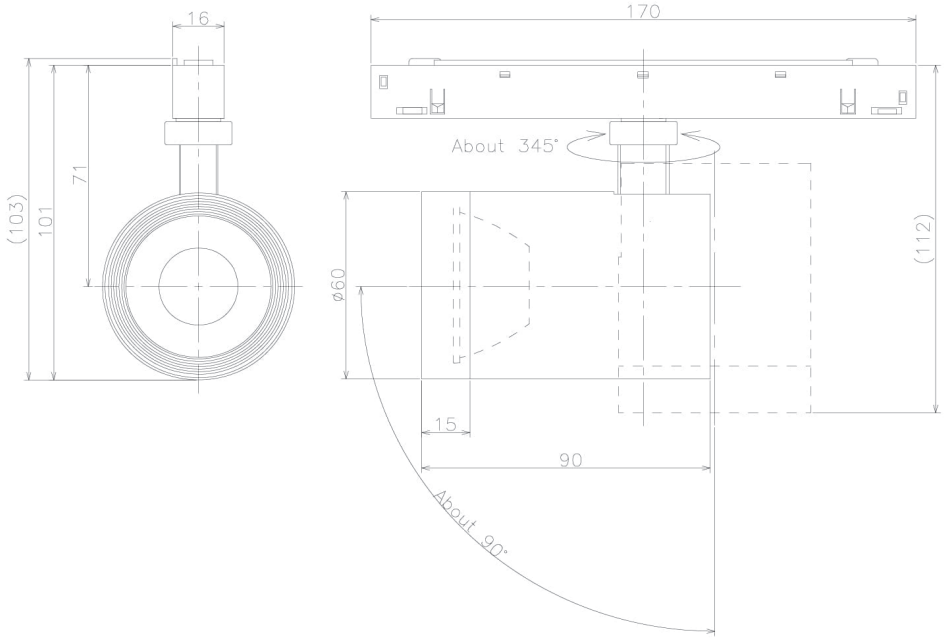
Installation	Track light
Type	Lens type Cylinder tracklight type (DC 48V)
Fixture wattage	14W
Beam angle	36deg
Color Temp.	3500K
CRI	Ra>90
Luminous	1641 lm
Body	Die-cast aluminum alloy
Body finish	Black
Trim finish	Black
Reflector finish	N/A
IP Rate	IP20
Light source	COB module
Input Voltage	DC 48V
Dimming Type	Non-dimmable
Certificate	CE, CCC
Cut Hole	N/A