KOIZUMI
＿違う発想がある

KOIZUMI SANGYO (HK) CORPORATION LTD.
Units A-B, 26th Floor, 8 Hart Avenue, Tsimshatsui, Kowloon, Hong Kong
Tel: +852-2714 3773 Fax: +852-2714 0006

Item no. SD379-3530W9035

Series Name: AMMA Lens type Cylinder Tracklight (SD379)

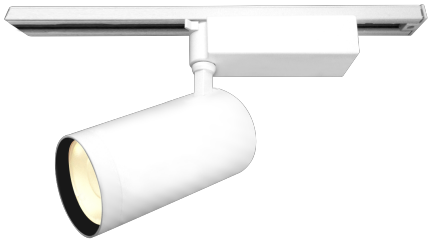
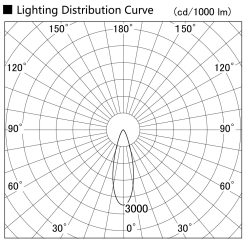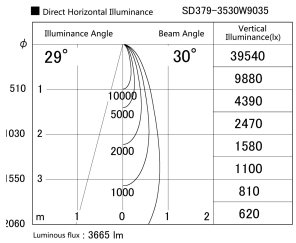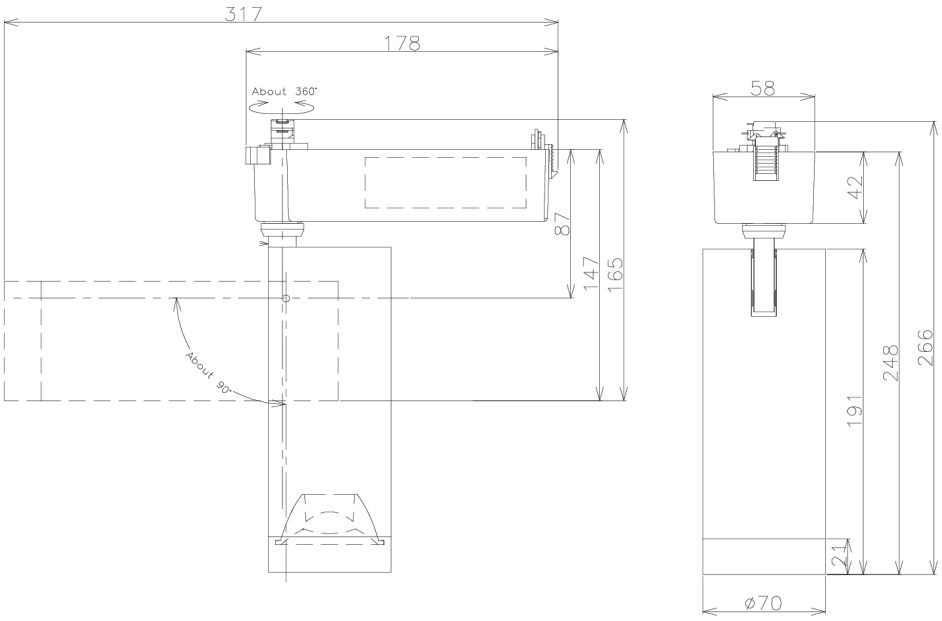
Installation	Track mount
Type	Lens type tracklight : Cylinder type
Fixture wattage	32W
Beam angle	30deg
Color Temp.	3500K
CRI	Ra>90
Luminous	3665 lm
Body	Die-castaluminumalloy
Body finish	White
Trim finish	White
Reflector finish	N/A
IP Rate	IP20
Light source	COB module
Input Voltage	AC220~240V
Dimming Type	Non-Dimmable
Certificate	CE,CCC
Cut Hole	N/A