KOIZUMI
＿違う発想がある

KOIZUMI SANGYO (HK) CORPORATION LTD.
Units A-B, 26th Floor, 8 Hart Avenue, Tsimshatsui, Kowloon, Hong Kong
Tel: +852-2714 3773 Fax: +852-2714 0006

# Item no. SD379-1610B9035

# Series Name: AMMA Lens type Cylinder Tracklight (SD379)
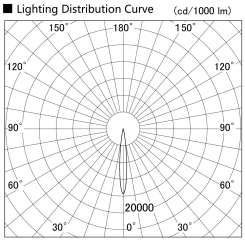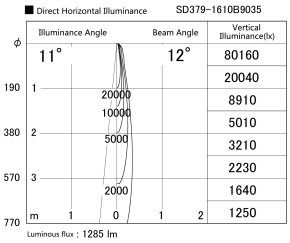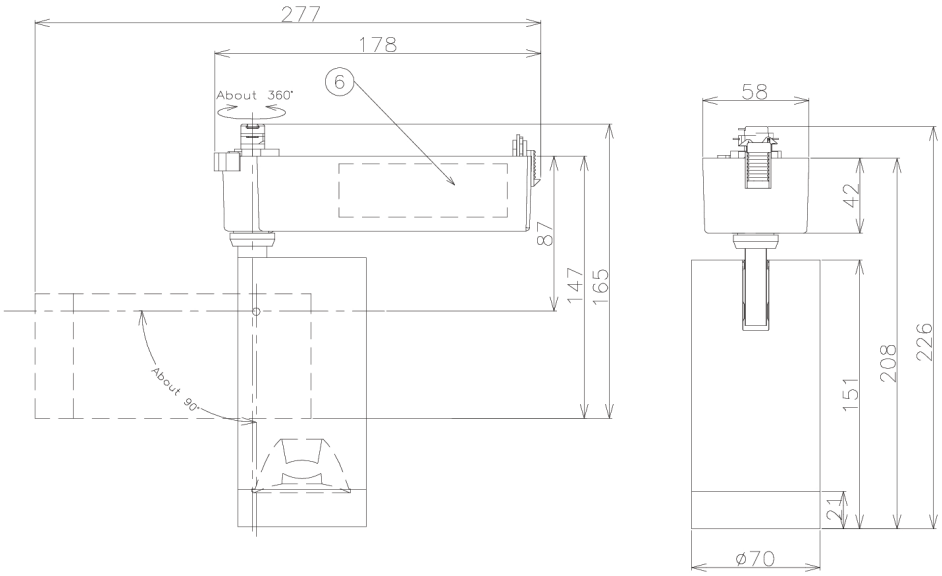
| | |
|---|---|
| Installation | Track mount |
| Type | Lens type tracklight : Cylinder type |
| Fixture wattage | 14W |
| Beam angle | 12deg |
| Color Temp. | 3500K |
| CRI | Ra>90 |
| Luminous | 1285 lm |
| Body | Die-castaluminumalloy |
| Body finish | Black |
| Trim finish | Black |
| Reflector finish | N/A |
| IP Rate | IP20 |
| Light source | COB module |
| Input Voltage | AC220~240V |
| Dimming Type | Non-Dimmable |
| Certificate | CE,CCC |
| Cut Hole | N/A |