KOIZUMI
＿違う発想がある

KOIZUMI SANGYO (HK) CORPORATION LTD.
Units A-B, 26th Floor, 8 Hart Avenue, Tsimshatsui, Kowloon, Hong Kong
Tel: +852-2714 3773 Fax: +852-2714 0006

Item no. SD379-3055B9035-IK

Series Name: AMMA Lens type Cylinder Tracklight (In Track) (SD379-IK)

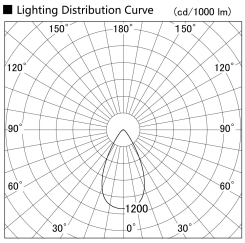

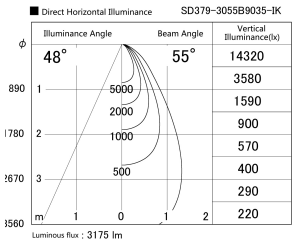
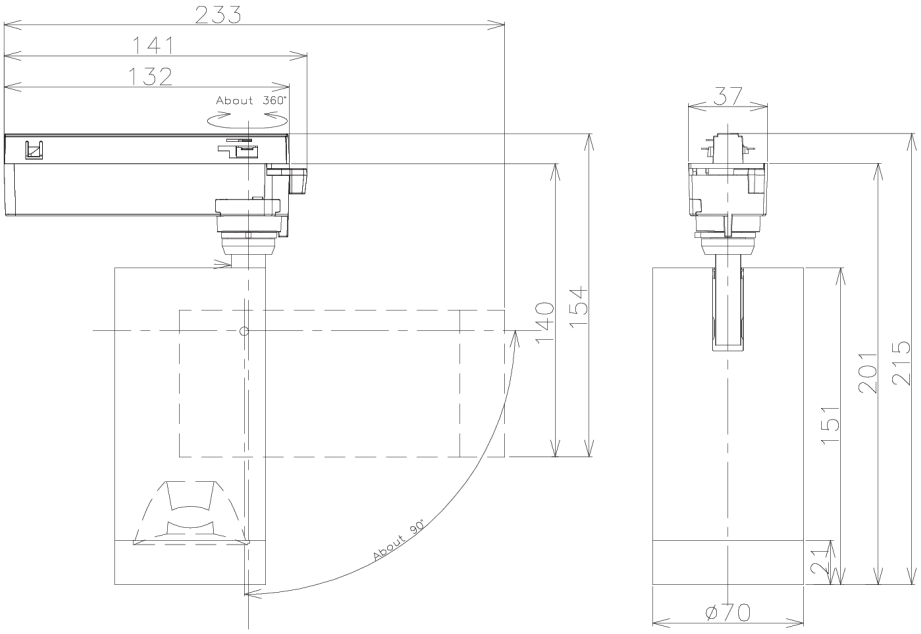
Installation	Track mount
Type	Lens type tracklight : In track type
Fixture wattage	28W
Beam angle	55deg
Color Temp.	3500K
CRI	Ra>90
Luminous	3175 lm
Body	Die-castaluminumalloy
Body finish	Black
Trim finish	Black
Reflector finish	N/A
IP Rate	IP20
Light source	COB module
Input Voltage	AC220~240V
Dimming Type	Non-Dimmable
Certificate	CE,CCC
Cut Hole	N/A