KOIZUMI
＿違う発想がある

KOIZUMI SANGYO (HK) CORPORATION LTD.
Units A-B, 26th Floor, 8 Hart Avenue, Tsimshatsui, Kowloon, Hong Kong
Tel: +852-2714 3773 Fax: +852-2714 0006

Item no. DD130-1015CW9030-DM1

Series Name: CAMOS Hospitality Antiglare downlight (DD130)

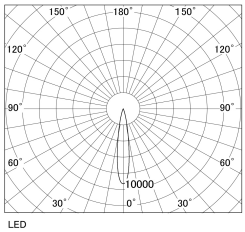

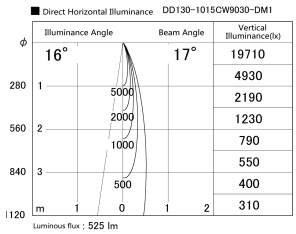
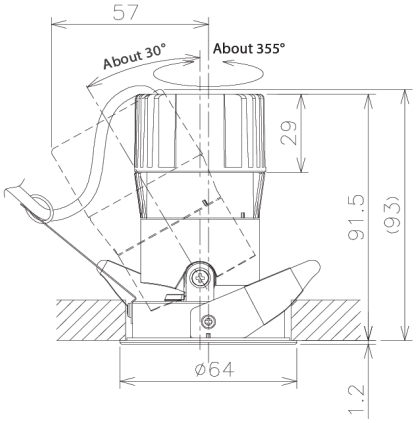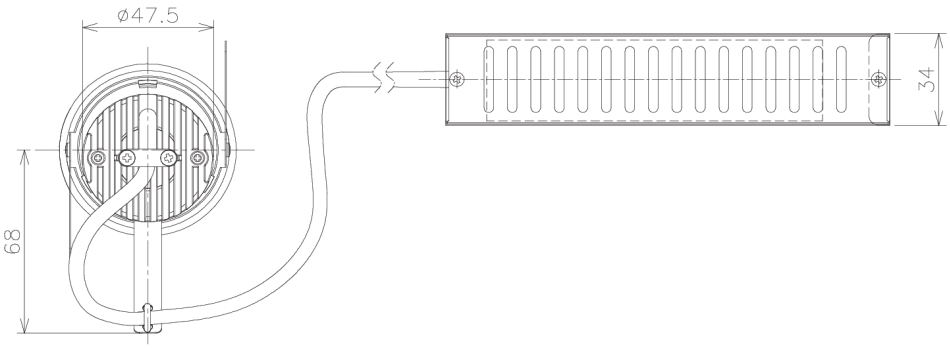
Installation	Recessed mount
Type	Φ60 adjustable downlight: Antiglare type
Fixture wattage	8.8W
Beam angle	17deg
Color Temp.	3000K
CRI	Ra>90
Luminous	527 lm
Body	Die-cast aluminum alloy
Body finish	N/A
Trim finish	White
Reflector finish	Black Chrome
IP Rate	IP20
Light source	COB module
Input Voltage	AC220~240V
Dimming Type	1-10v Dimmable
Certificate	CE, CCC
Cut Hole	60mm