KOIZUMI
＿違う発想がある

KOIZUMI SANGYO (HK) CORPORATION LTD.
Units A-B, 26th Floor, 8 Hart Avenue, Tsimshatsui, Kowloon, Hong Kong
Tel: +852-2714 3773 Fax: +852-2714 0006

# Item no. DD130-1015CW9040-DM1

# Series Name: CAMOS Hospitality Antiglare downlight (DD130)

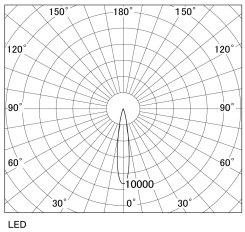


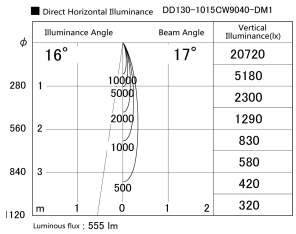

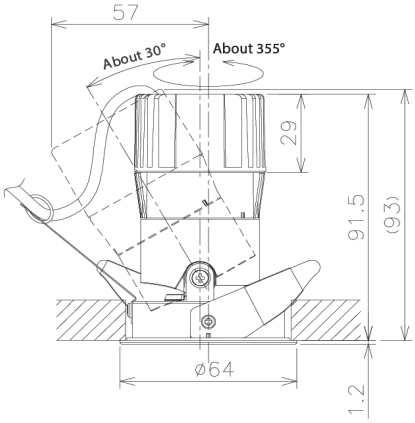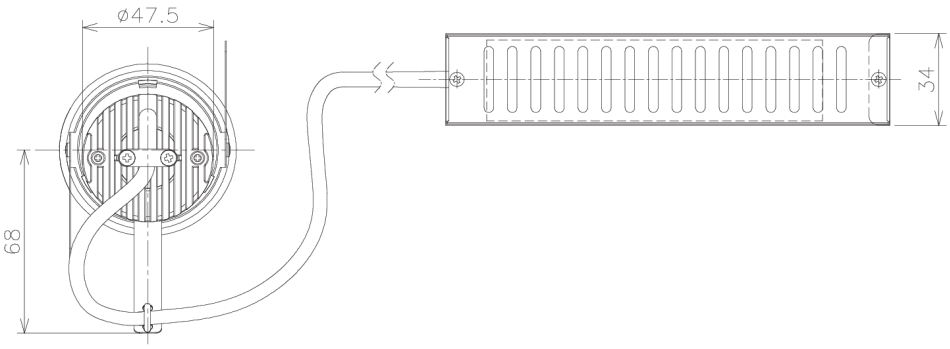
| | |
|---|---|
| Installation | Recessed mount |
| Type | Φ60 adjustable downlight: Antiglare type |
| Fixture wattage | 8.8W |
| Beam angle | 17deg |
| Color Temp. | 4000K |
| CRI | Ra>90 |
| Luminous | 554 lm |
| Body | Die-cast aluminum alloy |
| Body finish | N/A |
| Trim finish | White |
| Reflector finish | Black Chrome |
| IP Rate | IP20 |
| Light source | COB module |
| Input Voltage | AC220~240V |
| Dimming Type | 1-10v Dimmable |
| Certificate | CE, CCC |
| Cut Hole | 60mm |