KOIZUMI
＿違う発想がある

KOIZUMI SANGYO (HK) CORPORATION LTD.
Units A-B, 26th Floor, 8 Hart Avenue, Tsimshatsui, Kowloon, Hong Kong
Tel: +852-2714 3773 Fax: +852-2714 0006

Item no. DD146-2050WW9035

Series Name: Cledy versa L-G Antiglare (DD146-AG)

White Reflector

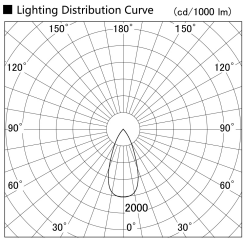

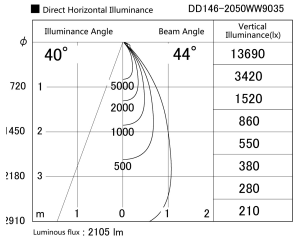
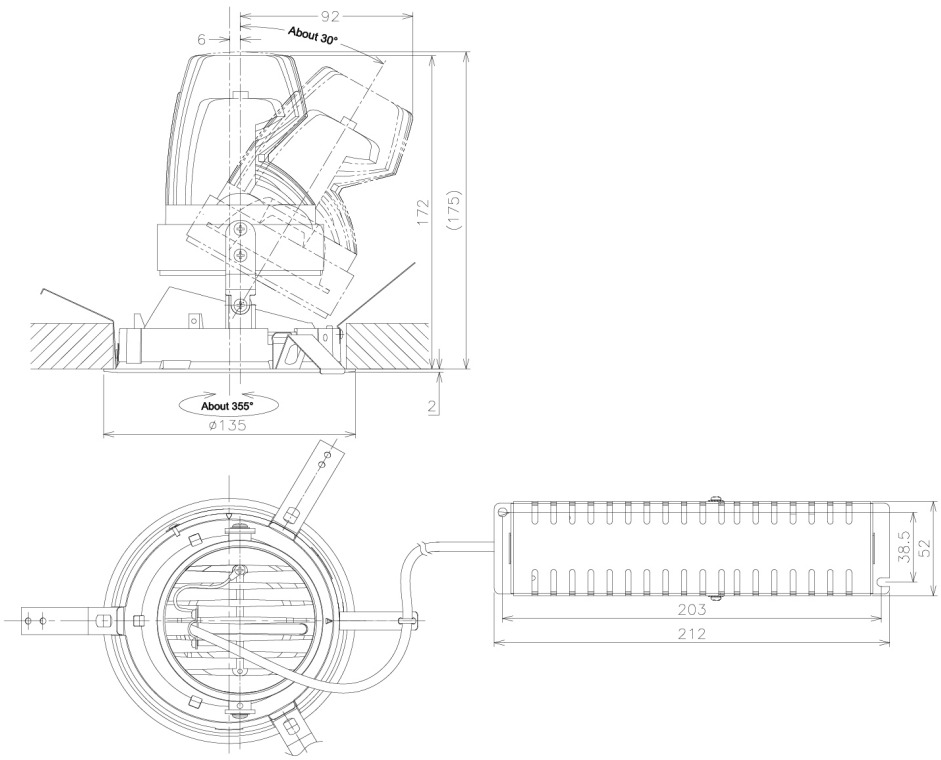
Installation	Recessed mount
Type	Lens type adjustable downlight: Antiglare type
Fixture wattage	21W
Beam angle	44deg
Color Temp.	3500K
CRI	Ra>90
Luminous	2105 lm
Body	Die-castaluminumalloy
Body finish	N/A
Trim finish	White
Reflector finish	White
IP Rate	IP20
Light source	COB module
Input Voltage	AC220~240V
Dimming Type	Non-Dimmable
Certificate	CE,CCC
Cut Hole	125mm